Symbol	Part Code	Description	Q'ty A	Q'ty B	Q'ty C	Q'ty D
D 851	HDS0437	Diode 1SS133	1	1	1	1
D 852	HDS0437	Diode 1SS133	1	1	1	1
D 853	HDS0437	Diode 1SS133	1	1	1	1
D 854	HDS0437	Diode 1SS133	1	1	1	1

ALT MAG SWITCHING

Symbol	Part Code	Description	Q'ty A	Q'ty B	Q'ty C	Q'ty D
R 860	RCE0770	R, Carbon 1/4W 1.2kΩ ±5%				1
R 860	RME1192	R, Metal 1/4W 24.3kΩ ±1%			1	
R 861	RCE0777	R, Carbon 1/4W 4.7kΩ ±5%			1	1
R 862	RCE0777	R, Carbon 1/4W 4.7kΩ ±5%			1	1
R 863	RCE0777	R, Carbon 1/4W 4.7kΩ ±5%			1	1
R 864	RCE0765	R, Carbon 1/4W 470Ω ±5%			1	1
R 865	RCE0765	R, Carbon 1/4W 470Ω ±5%			1	1
R 866	RME1085	R, Metal 1/4W 12.1kΩ ±1%				1
R 861	RME1090	R, Metal 1/4W 33.2kΩ ±1%			1	
R 869	RCE0745	R, Carbon 1/4W 10Ω ±5%			1	1
TR 860	HTA0224	Transistor 2SA1029D			1	1
TR 861	HTA0224	Transistor 2SA1029D			1	1
IC 801	IDH0586	Digital IC HD74LS74AP			1	1

⑦ HV Z AMP

HIGH VOLTAGE CKT

Symbol	Part Code	Description				Q'ty A	B	C	D
R 1001	RMS0023	R, Metal	1/4W	1.43MΩ	±0.5%	1	1	1	
R 1001	RMS0018	R, Metal	1/4W	1MΩ	±1%				1
R 1002	RCE0789	R, Carbon	1/4W	47kΩ	±5%	1	1	1	1
R 1003	RCE0797	R, Carbon	1/4W	220kΩ	±5%	1	1	1	1
R 1004	RCE0769	R, Carbon	1/4W	1kΩ	±5%	1	1	1	1
R 1005	RCE0777	R, Carbon	1/4W	4.7kΩ	±5%	1	1	1	
R 1005	RCE0775	R, Carbon	1/4W	3.3kΩ	±5%				1
R 1006	RCE0757	R, Carbon	1/4W	100Ω	±5%	1	1	1	1
R 1012	RCE0789	R, Carbon	1/4W	47kΩ	±5%				1
R 1014	RCE0715	R, Carbon	1/2W	6.8kΩ	±5%	1	1	1	1
R 1017	RMV0004	R, Metal	1/2W	22.1MΩ	±1%	1	1	1	1
R 1016	RCE0800	R, Carbon	1/4W	470kΩ	±5%	1	1	1	
R 1016	RCE0745	R, Carbon	1/4W	10Ω	±5%				1
R 1020	RCE0798	R, Carbon	1/4W	330kΩ	±5%	1	1	1	1
R 1021	RCE0785	R, Carbon	1/4W	22kΩ	±5%	1	1	1	
R 1021	RCE0773	R, Carbon	1/4W	2.2kΩ	±5%				1
R 1023	RCE0777	R, Carbon	1/4W	4.7kΩ	±5%	1	1	1	1
R 1024	RSE0434	R, Solid	ERC14G	10MΩ		1	1	1	1
R 1033	RCE0781	R, Carbon	1/4W	10kΩ	±5%				1
R 1034	RCE0785	R, Carbon	1/4W	22kΩ	±5%				1
R 1038	RCE0793	R, Carbon	1/4W	100kΩ	±5%				1
R 1038	RCE0798	R, Carbon	1/4W	330kΩ	±5%	1	1	1	1
R 1350	RCE0749	R, Carbon	1/4W	22Ω	±5%	1	1	1	1
C 1001	CQA0099	C, Plastic	50V	0.022μF	±10%	1	1	1	1
C 1002	CES0035	C, AL Elyc	50V	47μF	±10%	1	1	1	1
C 1005	CQA0101	C, Plastic	50V	0.047μF	±10%	1	1	1	1
C 1012	CCD0231	C, Ceramic	2000V	4700pF	+80 -20%	1	1	1	1
C 1013	CCD0231	C, Ceramic	2000V	4700pF	+80 -20%	1	1	1	1
C 1014	CCD0231	C, Ceramic	2000V	4700pF	+80 -20%	1	1	1	1
C 1016	CCD0245	C, Ceramic	2000V	100pF	±10%	1	1	1	1
C 1020	CCD0286	C, Ceramic	500V	1000pF	+100 -0%	1	1	1	1
C 1021	CEC0213	C, AL Elyc	160V	1μF	1	1	1	1	1
C 1023	CCD0246	C, Ceramic	2kV	1000pF	±10%	1	1	1	1
C 1025	CCD0231	C, Ceramic	2000V	4700pF	+80 -20%	1	1	1	1
C 1034	CCD0287	C, Ceramic	500V	4700pF	+100 -0%				1
C 1035	CCD0287	C, Ceramic	500V	4700pF	+100 -0%	1	1	1	1
C 1038	CCD0287	C, Ceramic	500V	4700pF	+100 -0%	1	1	1	1
RV 1021	RNE0054	VR, Metal	EVN39C00YB15 (100K)			1	1	1	1
RV 1033	RNE0054	VR, Metal	EVN39C00YB15 (100K)						1
RV 1035	RNE0055	VR, Metal	EVN39C00YB25 (200K)			1	1	1	
RV 1035	RNE0054	VR, Metal	EVN39C00YB15 (100K)						1
RV 1348	8348450	VR, Metal	CR29R	22kΩ		1	1	1	1
TR 1001	HTK0081	Transistor	2SK304E			1	1	1	1
TR 1002	HTA0224	Transistor	2SA1029D			1	1	1	1
TR 1006	HTD0155	Transistor	2SD313E			1	1	1	1
	HYX0010		30F-TO-220			1	1	1	1
TR 1348	HTC0148	Transistor	2SC458C			1	1	1	1
TR 1349	HTA0224	Transistor	2SA1029D			1	1	1	1
D 1012	HDY0031	Diode	Y10GA			1	1	1	
D 1013	HDY0031	Diode	Y10GA						1
D 1020	HDH0072	Diode	HZ22						1
D 1021	HDS0250	Diode	1SS83			1	1	1	1
D 1022	HDS0250	Diode	1SS83			1	1	1	1
D 1023	HDS0250	Diode	1SS83			1	1	1	1
D 1024	HDS0250	Diode	1SS83			1	1	1	1
D 1038	HDH0072	Diode	HZ22			1	1	1	1

Symbol	Part Code	Description			Q'ty A	B	C	D
T 1001	3180008	XFMR	FOR V-211,212,222, 422		1	1	1	1
F 1001		Fuse	TSCR UL 125V	0.25A	1	1	1	
MUT1001	3180009	Multiplier	10KV X5					1
NL 1024	ELL0019	Lamps	NE-2		1	1	1	1
NL 1025	ELL0019	Lamps	NE-2		1	1	1	1
F 1001	EFL0147	Fuse	TSCR UL 125V	0.5A				1

PANEL and OTHERS

Symbol	Part Code	Description		Q'ty A	B	C	D
V 1001	DPX0076	CRT	150BTB31 (IG)	1	1	1	
V 1001	DPX0077	CRT	2977B31				1
	8338351	Terminal	Z-048	1	1	1	1
J 9	JHB0088	CON. Coax	BNC071	1	1	1	1
L 1350		Coil	Trace Rotation	1	1	1	1

Z AXIS AMP

Symbol	Part Code	Description				Q'ty A	B	C	D
R 901	RCE0789	R, Carbon	1/4W	47kΩ	±5%	1	1	1	
R 901	RCE0787	R, Carbon	1/4W	33kΩ	±5%				1
R 902	RCE0776	R, Carbon	1/4W	3.9kΩ	±5%	1	1	1	1
R 903	RCE0784	R, Carbon	1/4W	18kΩ	±5%				1
R 903	RCE0779	R, Carbon	1/4W	6.8kΩ	±5%	1	1	1	
R 904	RCE0725	R, Carbon	1/2W	47kΩ	±5%	1	1	1	
R 904	RCE0723	R, Carbon	1/2W	33kΩ	±5%				1
R 906	RCE0793	R, Carbon	1/4W	100kΩ	±5%				1
R 906	RCE0793	R, Carbon	1/4W	100kΩ	±5%	1	1	1	
R 907	RCE0757	R, Carbon	1/4W	100Ω	±5%	1	1	1	1
R 908	RCE0771	R, Carbon	1/4W	1.5kΩ	±5%				1
R 908	RCE0773	R, Carbon	1/4W	2.2kΩ	±5%	1	1	1	
R 909	RCE0798	R, Carbon	1/4W	330kΩ	±5%	1	1	1	
R 909	RCE0797	R, Carbon	1/4W	220kΩ	±5%				1
R 910	RCE0783	R, Carbon	1/4W	15kΩ	±5%				1
R 910	RCE0793	R, Carbon	1/4W	100kΩ	±5%	1	1	1	
R 911	RCE0781	R, Carbon	1/4W	10kΩ	±5%	1	1	1	
R 911	RCE0769	R, Carbon	1/4W	1kΩ	±5%				1
R 912	RCE0745	R, Carbon	1/4W	10Ω	±5%	1	1	1	
R 912	RCE0745	R, Carbon	1/4W	10Ω	±5%				1
R 915	RCE0761	R, Carbon	1/4W	220Ω	±5%	1	1	1	1
R 930	RCE0776	R, Carbon	1/4W	3.9kΩ	±5%				1
R 930	RCE0777	R, Carbon	1/4W	4.7kΩ	±5%	1	1	1	
R 931	RCE0787	R, Carbon	1/4W	33kΩ	±5%			1	1
R 905	RCE0795	R, Carbon	1/4W	150kΩ	±5%				1

Symbol	Part Code	Description				Q'ty A	B	C	D
C 901	CES0028	C, AL Elyc	10V	47μF	±10%	1	1	1	1
C 904	CCD0272	C, Ceramic	500V	1 pF	±0.25pF	1	1	1	1
C 908	CCD0287	C, Ceramic	500V	4700pF	+100 -0%	1	1	1	1
C 912	CET0033	TC 04SM	160V	1μ		1	1	1	1
TR 901	HTC0192	Transistor	2SC641K-C			1	1	1	1
TR 906	HTC0148	Transistor	2SC458C			1	1	1	1
TR 910	HTA0277	Transistor	2SA1207S			1	1	1	1
TR 912	HTC0722	Transistor	2SC2909S			1	1	1	1
TR 931	HTA0104	Transistor	2SA778AK					1	1
D 901	HDS0437	Diode	1SS133			1	1	1	1
D 902	HDS0437	Diode	1SS133			1	1	1	1
D 910	HDS0437	Diode	1SS133			1	1	1	1

CRT

Symbol	Part Code	Description				Q'ty A	B	C	D
R 1018	RCE0738	R, Carbon	1/2W	2.2MΩ	±5%	1	1	1	
R 1030	RCE0781	R, Carbon	1/4W	10kΩ	±5%	1	1	1	
R 1031	RCE0793	R, Carbon	1/4W	100kΩ	±5%	1	1	1	
J 1001	8390152	Socket	1339 (CRT)			1	1	1	
PEF-626		PCB	PB-14			R	R	R	

CRT

Symbol	Part Code	Description				Q'ty A	B	C	D
R 1018	RCE0738	R, Carbon	1/2W	2.2MΩ	±5%				1
R 1030	RCE0777	R, Carbon	1/4W	4.7kΩ	±5%				1
R 1031	RCE0793	R, Carbon	1/4W	100kΩ	±5%				1
R 1032	RCE0757	R, Carbon	1/4W	100Ω	±5%				1
J 1001	8390152	Socket	1339 (CRT)						1
PEF-627		PCB	PB-14						R

⑧ POWER SUPPLY

Symbol	Part Code	Description				Q'ty A	B	C	D
R 1101	RCE0793	R, Carbon	1/4W	100kΩ	±5%	1	1	1	1
R 1102	RCE0769	R, Carbon	1/4W	1.0kΩ	±5%	1	1	1	1
R 1103	RCE0775	R, Carbon	1/4W	3.3kΩ	±5%	1	1	1	
R 1103	RCE0774	R, Carbon	1/4W	2.7kΩ	±5%				1
R 1104	RME1096	R, Metal	1/4W	100kΩ	±1%	1	1	1	
R 1104	RME1091	R, Metal	1/4W	39.2kΩ	±5%				1
R 1105	RCE0777	R, Carbon	1/4W	4.7kΩ	±5%	1	1	1	
R 1105	RCE0775	R, Carbon	1/4W	3.3kΩ	±5%				1
R 1106	RME1086	R, Metal	1/4W	15.0kΩ	±1%	1	1	1	
R 1106	RME1084	R, Metal	1/4W	10.0kΩ	±1%				1
R 1107	RCE0785	R, Carbon	1/4W	22kΩ	±5%	1	1	1	1
R 1109	RCE0769	R, Carbon	1/4W	1kΩ	±5%	1	1	1	1
R 1110	RCE0761	R, Carbon	1/4W	220Ω	±5%	1	1	1	1
R 1110	RCE0767	R, Carbon	1/4W	220Ω	±5%	1	1	1	1
R 1121	RCE0761	R, Carbon	1/4W	220Ω	±5%	1	1	1	1
R 1124	RCE0783	R, Carbon	1/4W	15kΩ	±5%	1	1	1	1
R 1125	RCE0753	R, Carbon	1/4W	47Ω	±5%	1	1	1	1
R 1131	RCE0685	R, Carbon	1/2W	22Ω	±5%	1	1	1	
R 1131	RCE0689	R, Carbon	1/2W	47Ω	±5%				1
R 1132	RCE0689	R, Carbon	1/2W	47Ω	±5%				1
R 1141	RCE0800	R, Carbon	1/4W	470kΩ	±5%	1	1	1	1
R 1142	RCE0787	R, Carbon	1/4W	33kΩ	±5%	1	1	1	1
C 1101	CES0201	C, AL Elyc	160V	47μF		1	1	1	1
C 1102	CES0203	C, AL Elyc	250V	47μF		1	1	1	1
C 1109	CES0201	C, AL Elyc	160V	47μF		1	1	1	1
C 1110	CQA0092	C, Plastic	50V	0.0015μF		1	1	1	1
C 1111	CES0204	C, AL Elyc	25V	2200μF		1	1	1	1
C 1112	CES0028	C, AL Elyc	10V	47μF/LB		1	1	1	1
C 1121	CES0204	C, AL Elyc	25V	2200μF		1	1	1	1
C 1121	CES0028	C, AL Elyc	10V	47μF/LB		1	1	1	1
C 1124	CQA0101	C, Plastic	50V	0.047μF	±10%	1	1	1	1
C 1131	CES0036	C, AL Elyc	25V	22μF/LB		1	1	1	1
C 1138	CES0028	C, AL Elyc	10V	47μF/LB		1	1	1	1
TR 1102	HTC0671	Transistor	2SC1505L			1	1	1	1
TR 1101	HTA0104	Transistor	2SA778AK			1	1	1	1
TR 1103	HTA0224	Transistor	2SA1029D			1	1	1	1
TR 1104	HTC0148	Transistor	2SC458C			1	1	1	1
IC 1111	ILH0109	Digital IC	HA17808P			1	1	1	1
IC 1121	ILM0342	Digital IC	M PC7808			1	1	1	1
IC 1131	ILH0108	Digital IC	HA17805P			1	1	1	1
D 1101	HDS0476	Diode	S5566J			1	1	1	1
D 1102	HDS0476	Diode	S5566J			1	1	1	1
D 1103	HDS0476	Diode	S5566J			1	1	1	1
D 1104	HDS0476	Diode	S5566J			1	1	1	1
D 1105	HDS0476	Diode	S5566J			1	1	1	1
D 1106	HDS0476	Diode	S5566J			1	1	1	1
D 1111	HDS0475	Diode	S5566B			1	1	1	1
D 1112	HDS0475	Diode	S5566B			1	1	1	1
D 1113	HDS0475	Diode	S5566B			1	1	1	1
D 1114	HDS0475	Diode	S5566B			1	1	1	1
P 1101	JBX0703	Connector	1-171825-0			1	1	1	1
PEF-621		PCB	PB-15			R	R	R	R

SCALE, ILLUM LAMP

Symbol	Part Code	Description		Q'ty A	B	C	D
PL 1401	8400068	Lamp	8V			1	1
PL 1402	8400068	Lamp	8V			1	1
PL 1403	8400068	Lamp	8V			1	1
PEF-623		PCB	PB-15			R	R

PANEL and OTHERS

Symbol	Part Code	Description		Q'ty A	B	C	D
J 1102	JJC0026	Connector	CM3 (C-170)	1	1	1	1
J 1103	3142147	Unit PWP	S-17221 (100/120/220/240V)	1	1	1	1
S 1101	8400067	SW, PB	SDV 3P	1	1	1	1
T 1101	3173880	XFMR	For V-211,212, 222, 422	1	1	1	1
D 1110	HDS0408	Diode	SR503D with mount(red)	1	1	1	1
TR 1310	HTD0155	Transistor	2SD313E			1	1

⑨ RV/LAMP

Symbol	Part Code	Description				Q'ty A	Q'ty B	Q'ty C	Q'ty D
R 932	RCE0737	R, Carbon	1/2W	1.8MΩ	±5%			1	
R 932	RCE0738	R, Carbon	1/2W	2.2MΩ	±5%				1
R 933	RMW0008	R, Metal	VR37-15MΩ		±5%	1	1	1	1
R 1019	RCE0793	R, Carbon	1/4W	100kΩ	±5%			1	
R 1019	RCE0798	R, Carbon	1/4W	330kΩ	±5%				1
R 1301	RCE0773	R, Carbon	1/4W	2.2kΩ	±5%				1
R 1301	RCE0775	R, Carbon	1/4W	3.3kΩ	±5%	1	1	1	
R 1310	RCE0777	R, Carbon	1/4W	4.7kΩ	±5%			1	1
R 1311	RCE0775	R, Carbon	1/4W	3.3kΩ	±5%			1	1
R 932	RCE0715	R, Carbon	1/2W	6.8kΩ	±5%	1	1		
R 1019	RCE0800	R, Carbon	1/4W	470kΩ	±5%	1	1		
R 1312	RCE0773	R, Carbon	1/4W	2.2kΩ	±5%			1	1
RV 1301	8348452	VR, Carbon	EVH-CCAK20B14			1	1	1	1
RV 1311	8348452	VR, Carbon	EVH-CCAK20B14					1	1
RV 1401	RNE0059	VR, Metal	EVHNDGK20B26			1	1	1	1
TR 1311	HTA0224	Transistor	2SA1029D					1	1
D 1310	HDS0437	Diode	1SS133					1	1
PEF-625		PCB	PB-15					R	R

7. ELECTRICAL PARTS ARRANGEMENT (WITH ADJUSTMENT LOCATIONS)

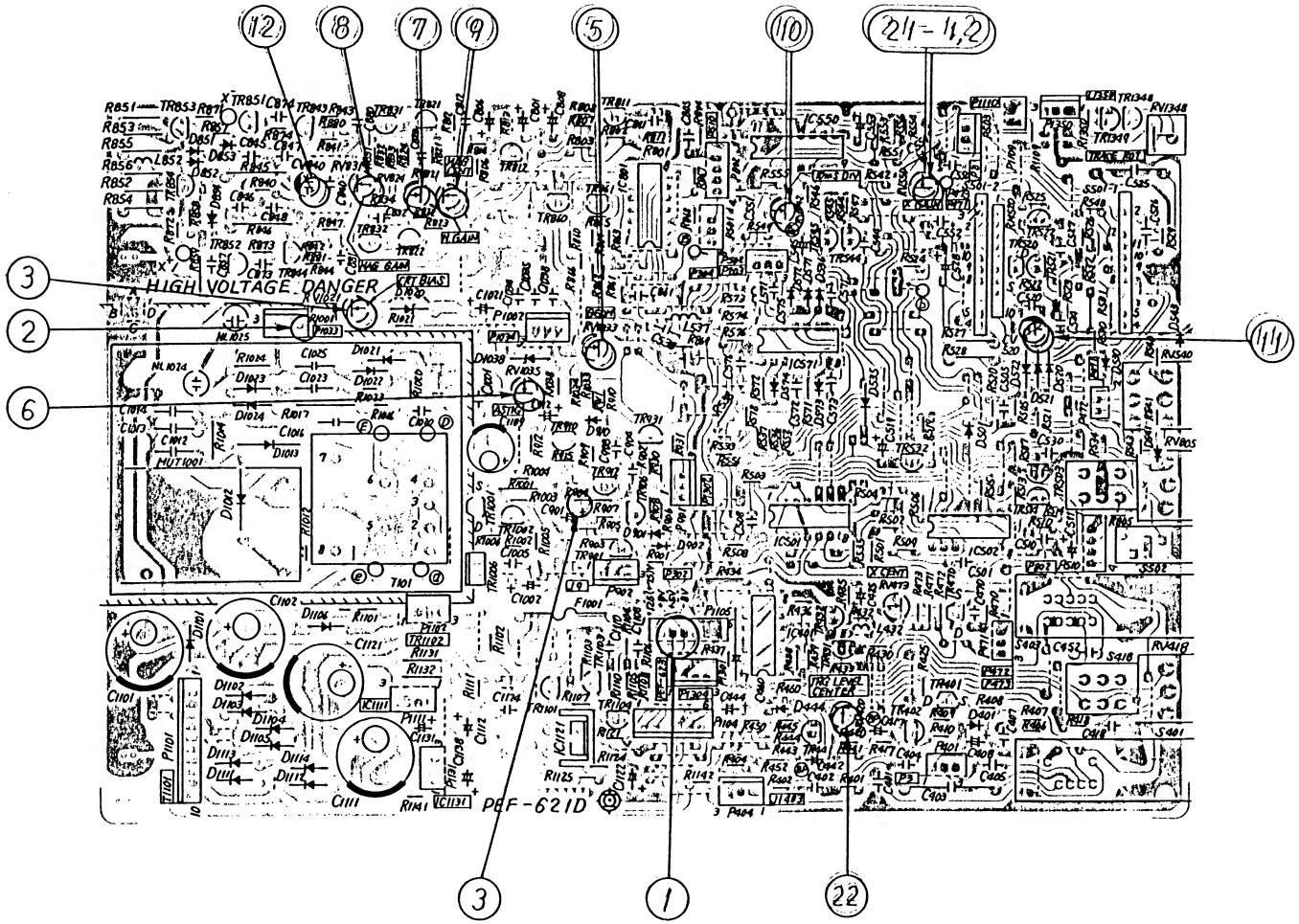

PEF-621D PCB

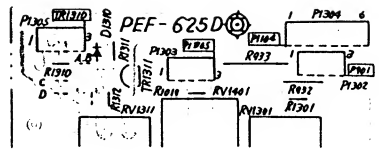

PEF-625D PCB

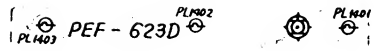

PEF-623D PCB

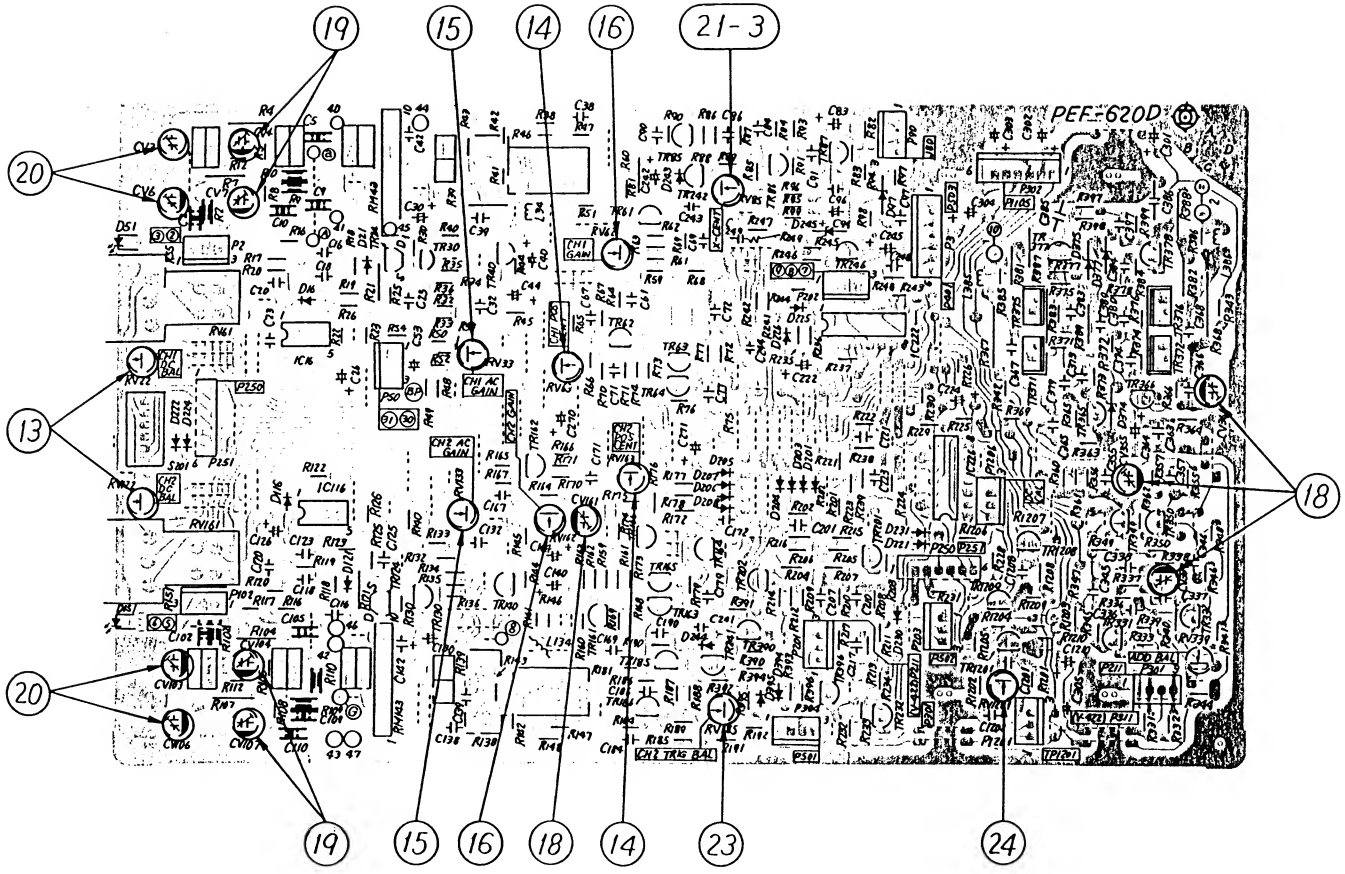

PEF-620D PCB

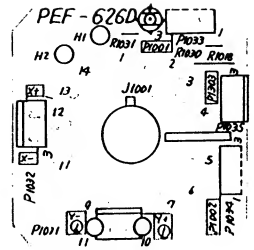

PEF-626D PCB

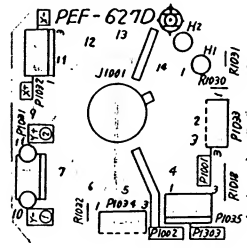

PEF-627D PCB

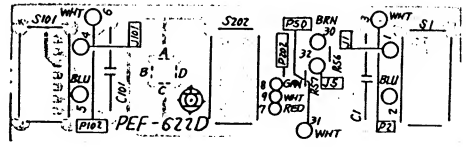

PEF-622D PCB

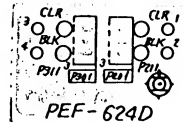

PEF-624D PCB

8. BLOCK DIAGRAM

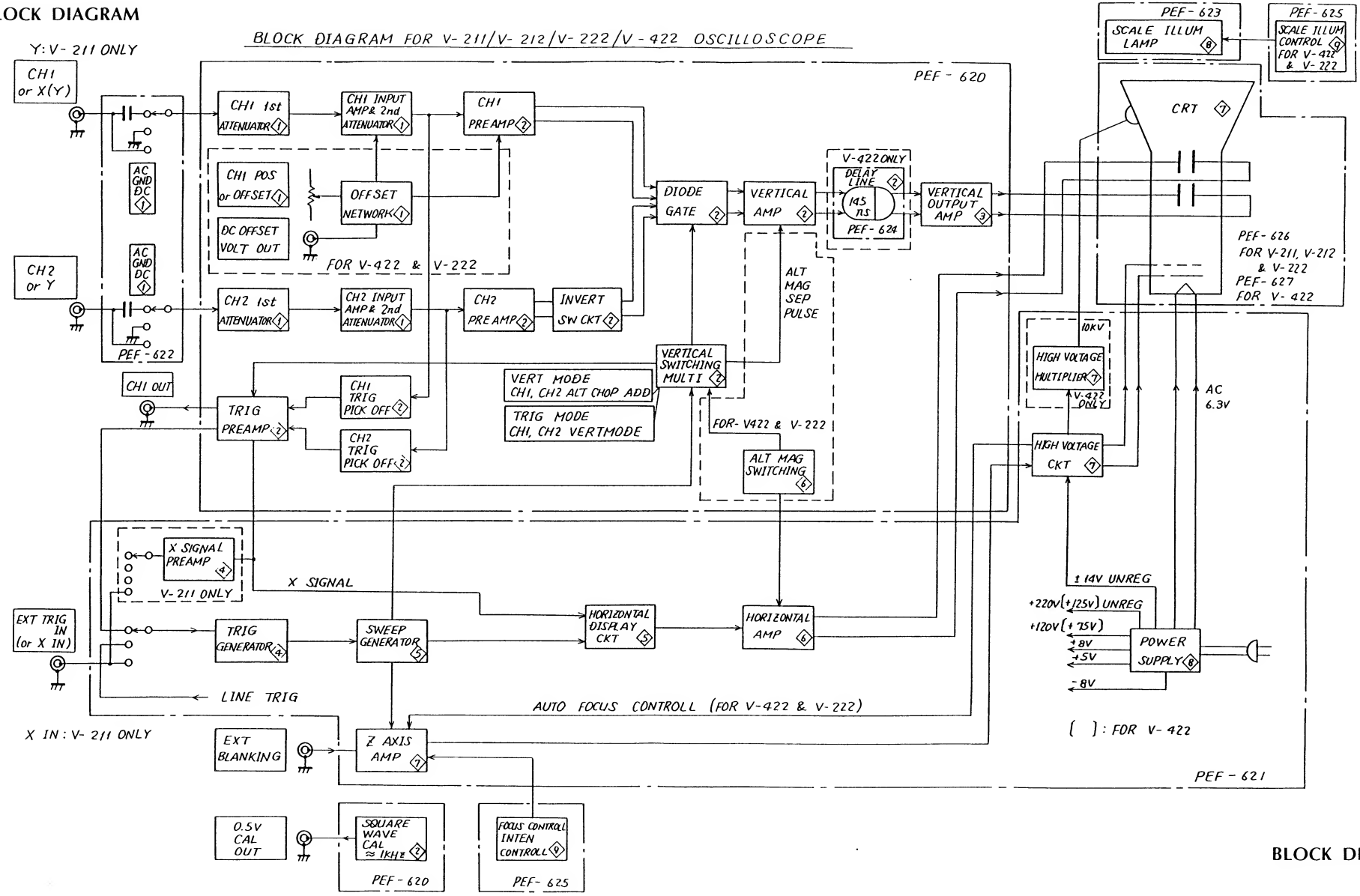

BLOCK DIAGRAM

10. SCHEMATIC DIAGRAMS

Note

1. This basic circuit diagram is subject to change without notice.
2. All resistor values in ohm: 1/4W and all capacitor values in microfarad unless indicated.
3. * Factory selected values.

DC VOLTAGE MEASUREMENT CONDITIONS

TRIG LEVEL	:	CENTER
AC-GND-DC	:	DC
VOLTS/DIV	:	10 mV
INPUT	:	CH1
TRIG MODE	:	AUTO
TRIG SOURCE	:	INT
INT TRIG	:	CH1
SWEEP TIME	:	0.5 ms
PROBE	:	10 : 1

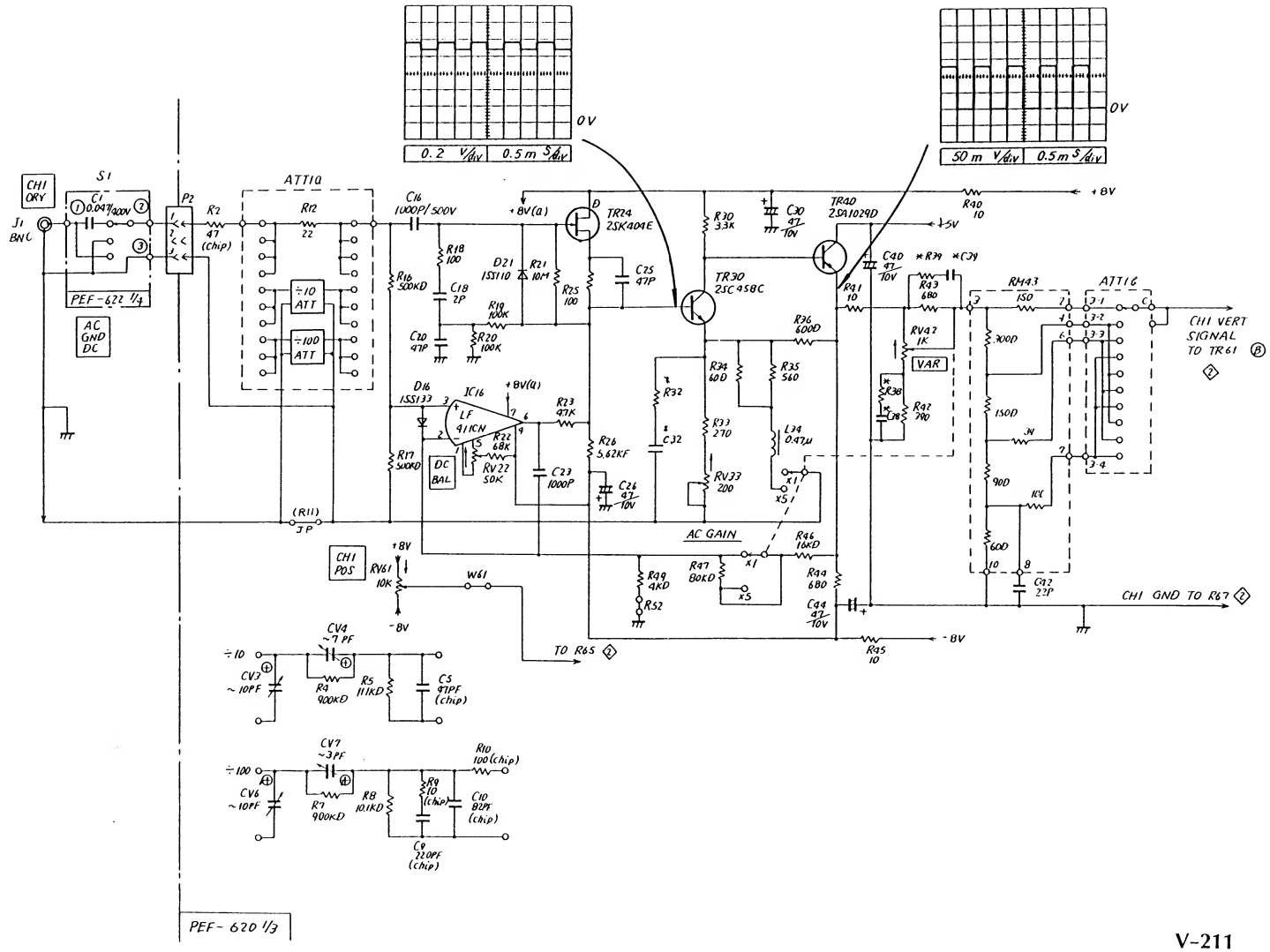

V-211

INPUT AMP ①

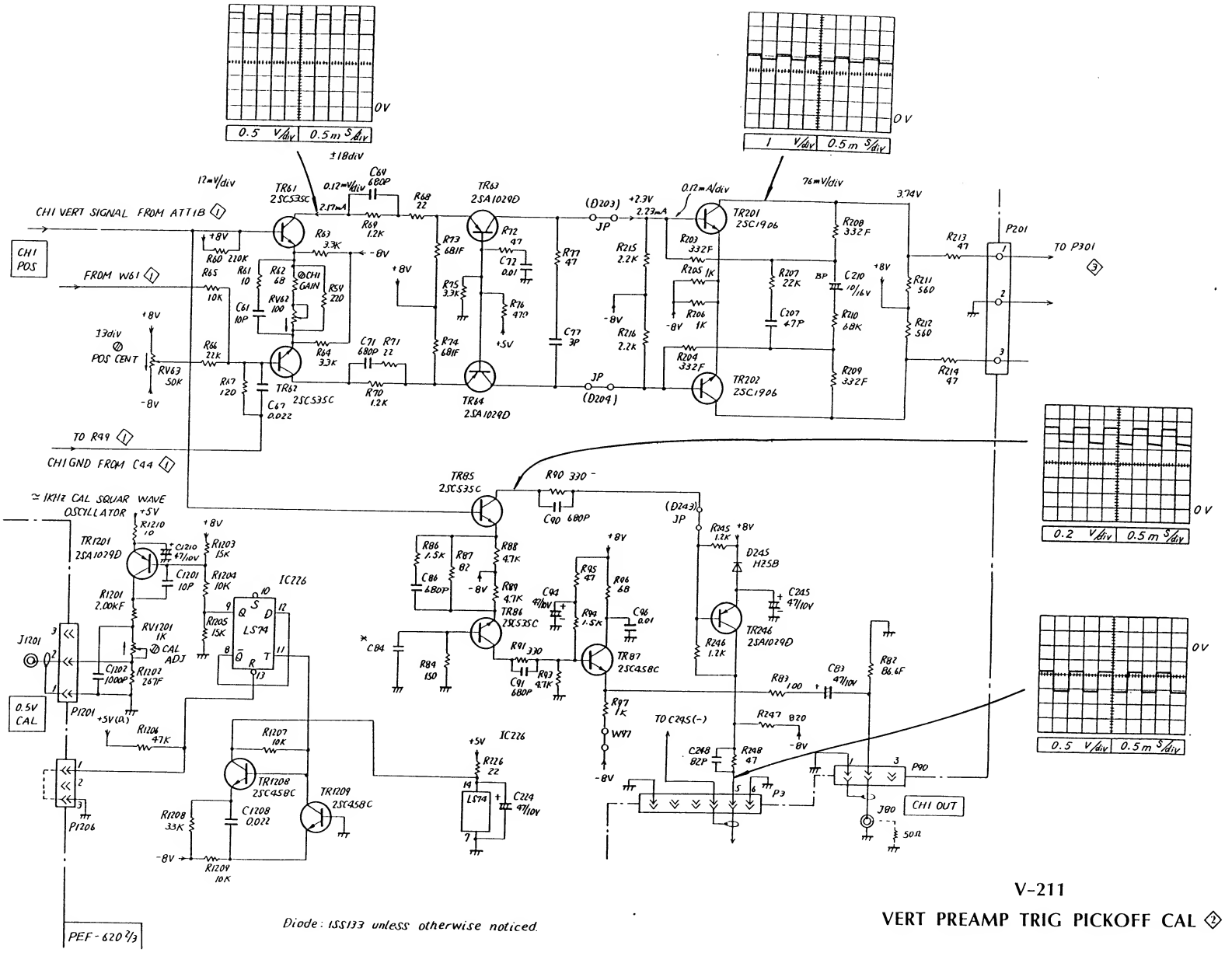

V-211

VERT PREAMP TRIG PICKOFF CAL ②

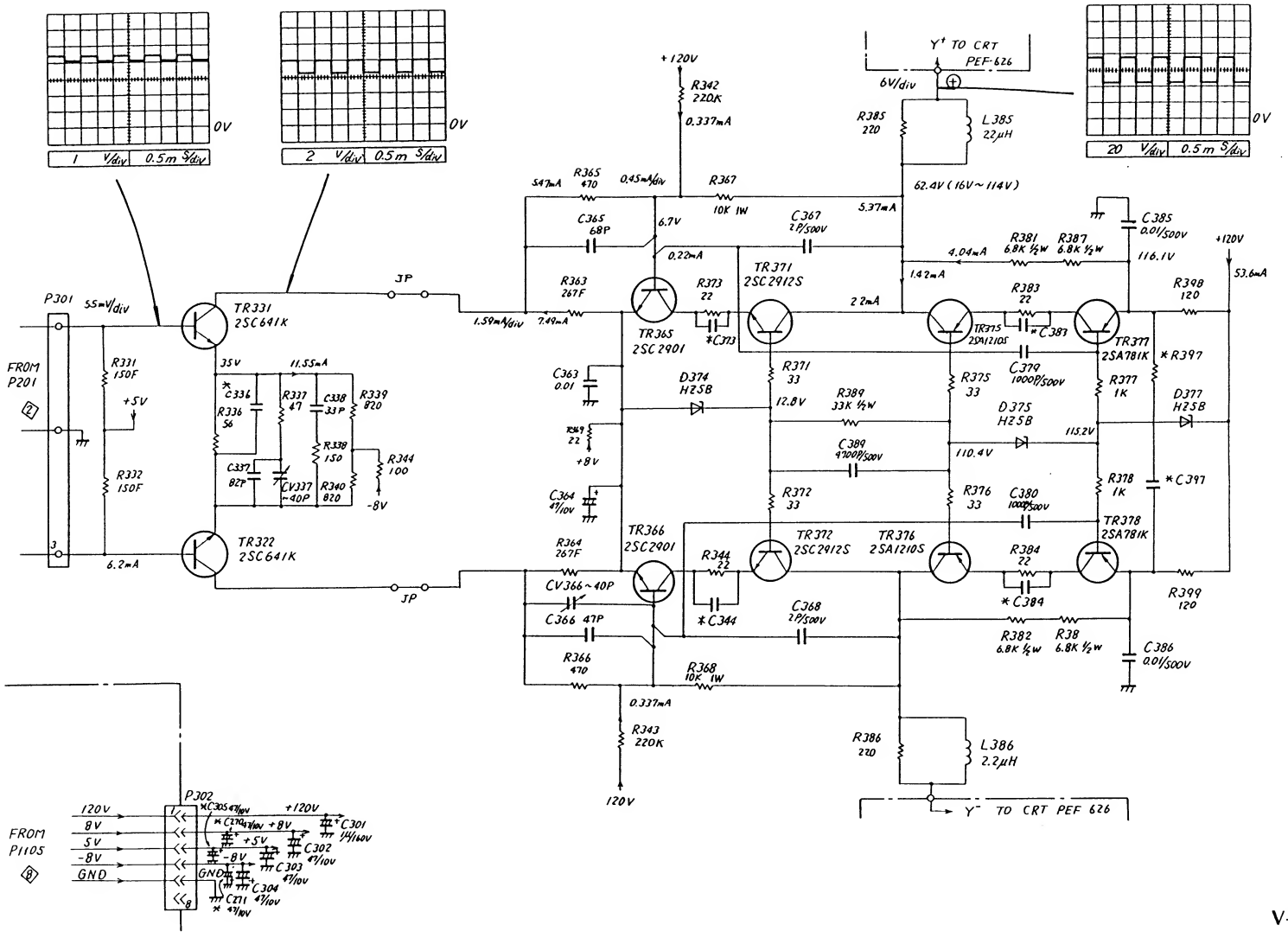
0V
1 V/div 0.5m S/div
0V
2 V/div 0.5m S/div
0V
20 V/div 0.5m S/div
Y+ TO CRT
PEF-626
6V/div
+120V
R342 220K
0.337mA
R385 220
L385 22μH
62.4V (16V~114V)
R365 470
0.45mA/div
R367 10K 1W
C365 68P
6.7V
C367 2P/500V
5.37mA
C385 0.01/500V
R381 6.8K ½W
R387 6.8K ½W
4.04mA
116.1V
+120V
53.6mA
0.22mA
1.42mA
R363 267F
R373 22
TR371 2SC2912S
2.2mA
R383 22
R398 120
P301
5.5mV/div
TR331 2SC641K
JP
1.59mA/div
7.49mA
TR365 2SC2901
*C373
TR375 2SA1210S
*C383
TR377 2SA781K
FROM P201
R331 150F
+5V
35V
11.55mA
*C336
R336 56
R337 47
C338 33P
R339 820
R338 150
R340 820
R344 100
-8V
C337 82P
CV337 ~40P
R332 150F
TR322 2SC641K
6.2mA
C363 0.01
D374 HZ5B
R371 33
12.8V
R389 33K ½W
R375 33
C379 1000P/500V
R377 1K
*R397
D377 HZ5B
D375 HZ5B
115.2V
R349 22
+8V
C389 4700P/500V
110.4V
C364 47/10V
R372 33
R376 33
C380 1000P/500V
R378 1K
*C397
TR366 2SC2901
TR372 2SC2912S
TR376 2SA1210S
TR378 2SA781K
R364 267F
R344 22
R384 22
CV366~40P
*C384
R399 120
C366 47P
*C344
C368 2P/500V
R382 6.8K ½W
R38 6.8K ½W
C386 0.01/500V
R366 470
R368 10K 1W
0.337mA
R343 220K
120V
R386 220
L386 2.2μH
Y- TO CRT PEF 626
P302
FROM P1105
120V
8V
5V
-8V
GND
*C305 47/10V
+120V
*C270 47/10V
+8V
C301 1/4/160V
+5V
C302 47/10V
-8V
C303 47/10V
GND
C304 47/10V
C271 47/10V

V-211

V OUT ③

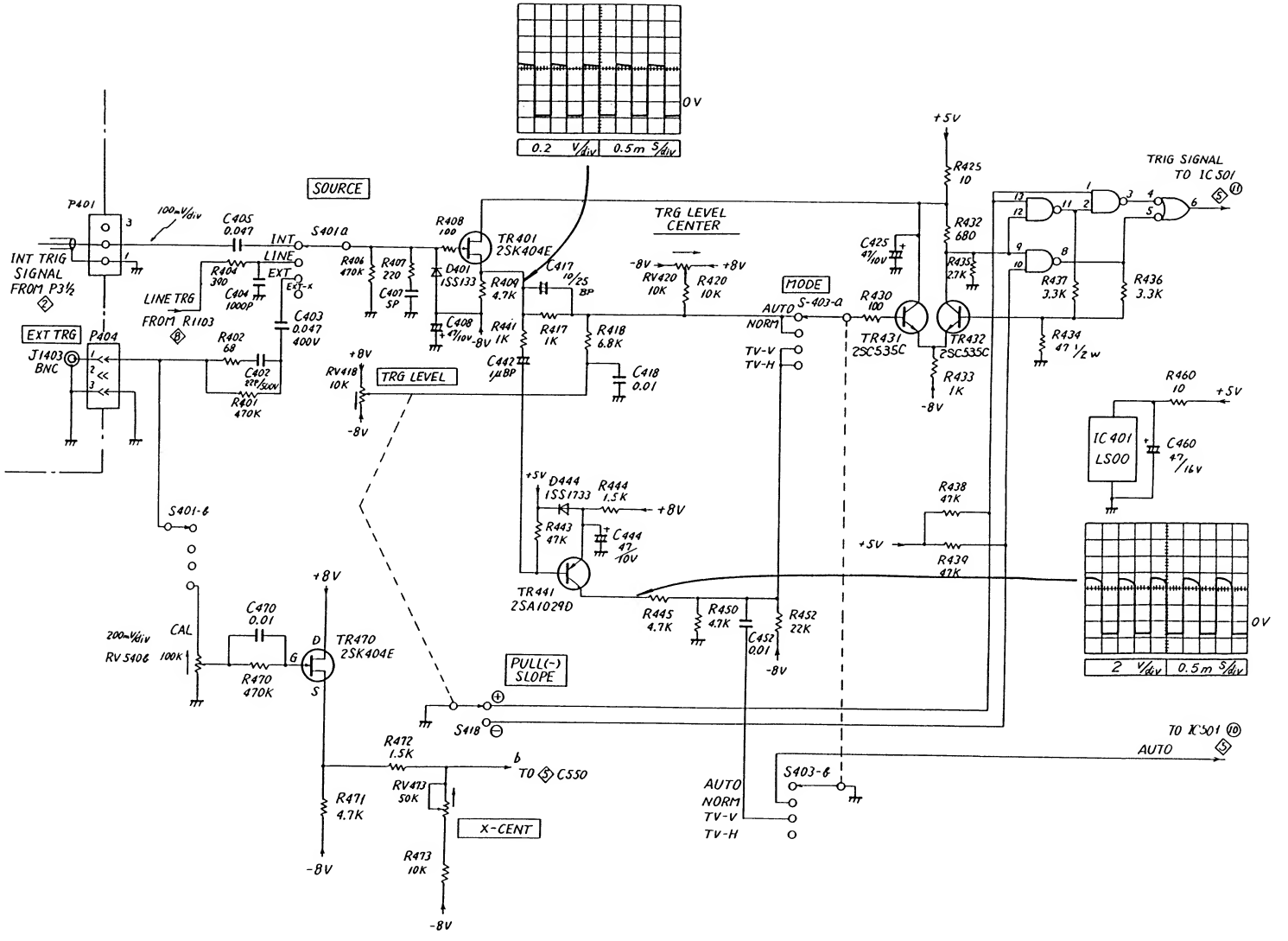

V-211
TRIG GEN ④

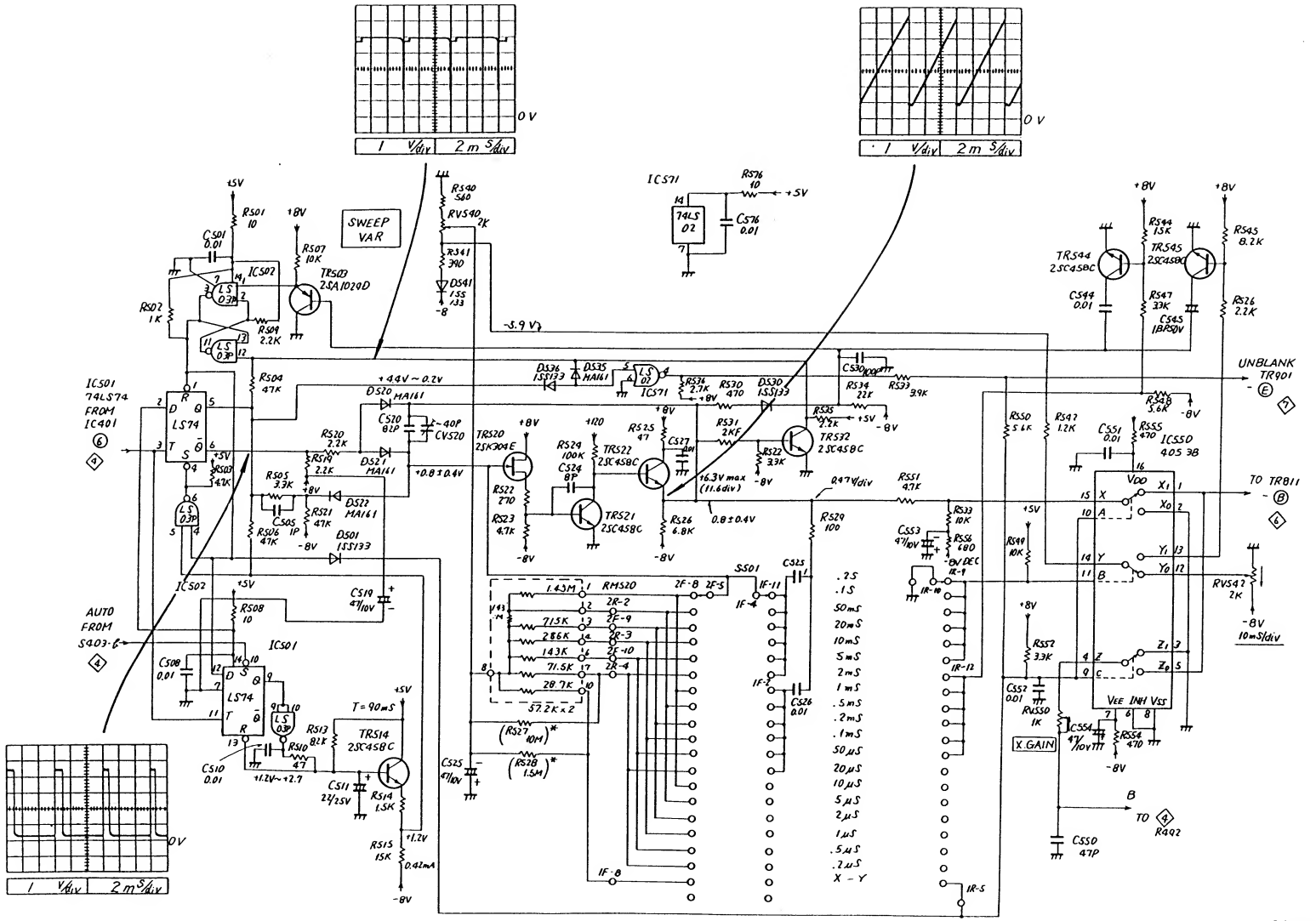

V-211

SWEEP GEN ⑤

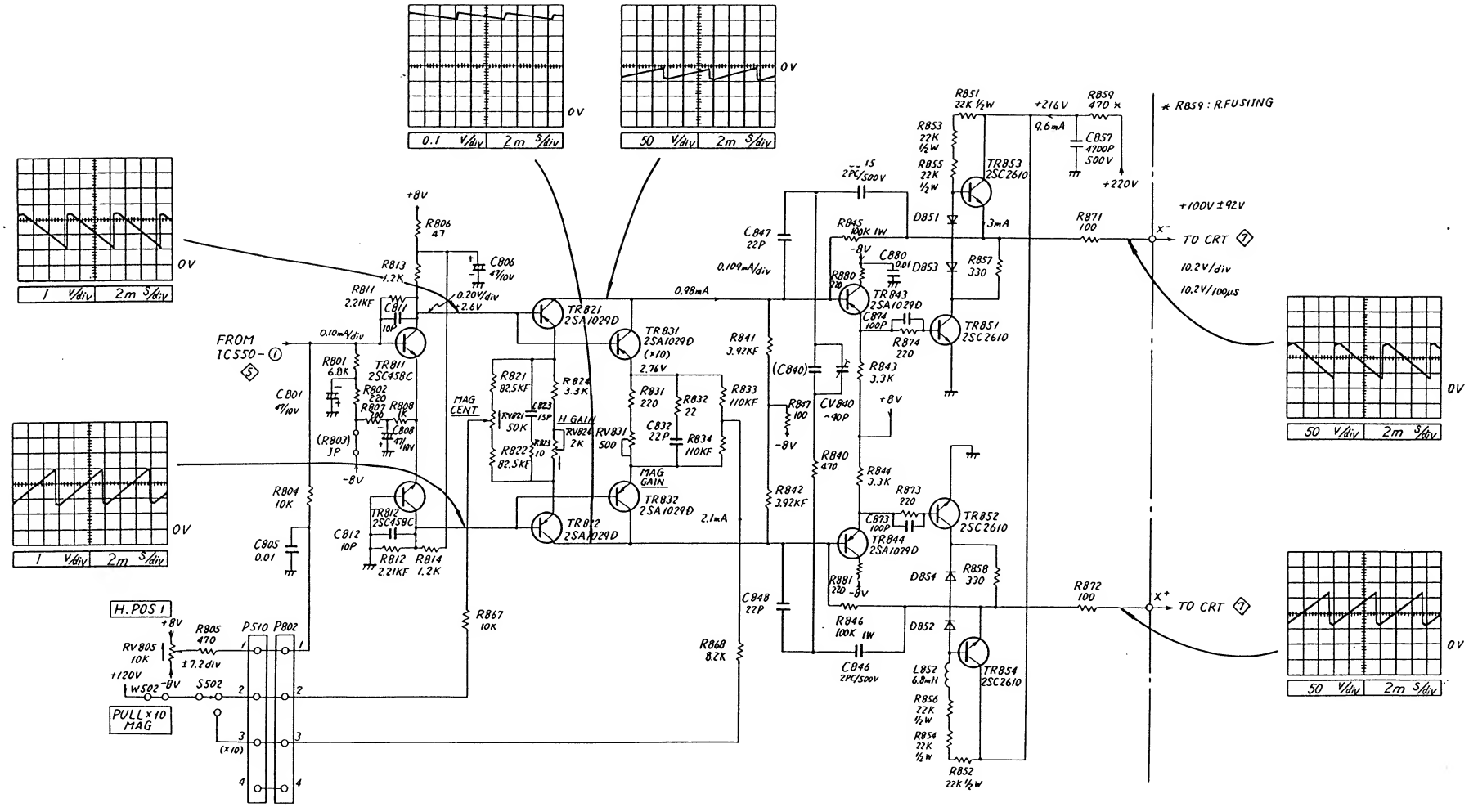
* RB59 : R.FUSIING
FROM IC550-①
TO CRT ⑦
TO CRT ⑦
H.POS 1
PULL×10 MAG
MAG CENT
H GAIN
MAG GAIN
TR811 2SC458C
TR812 2SC458C
TR821 2SA1029D
TR831 2SA1029D (×10)
TR832 2SA1029D
TR842 2SA1029D
TR843 2SA1029D
TR844 2SA1029D
TR851 2SC2610
TR852 2SC2610
TR853 2SC2610
TR854 2SC2610
+216V
+220V
+100V±92V
10.2V/div
10.2V/100μs
0.1 V/div 2m S/div
50 V/div 2m S/div
1 V/div 2m S/div

V-211

H AMP ⑥

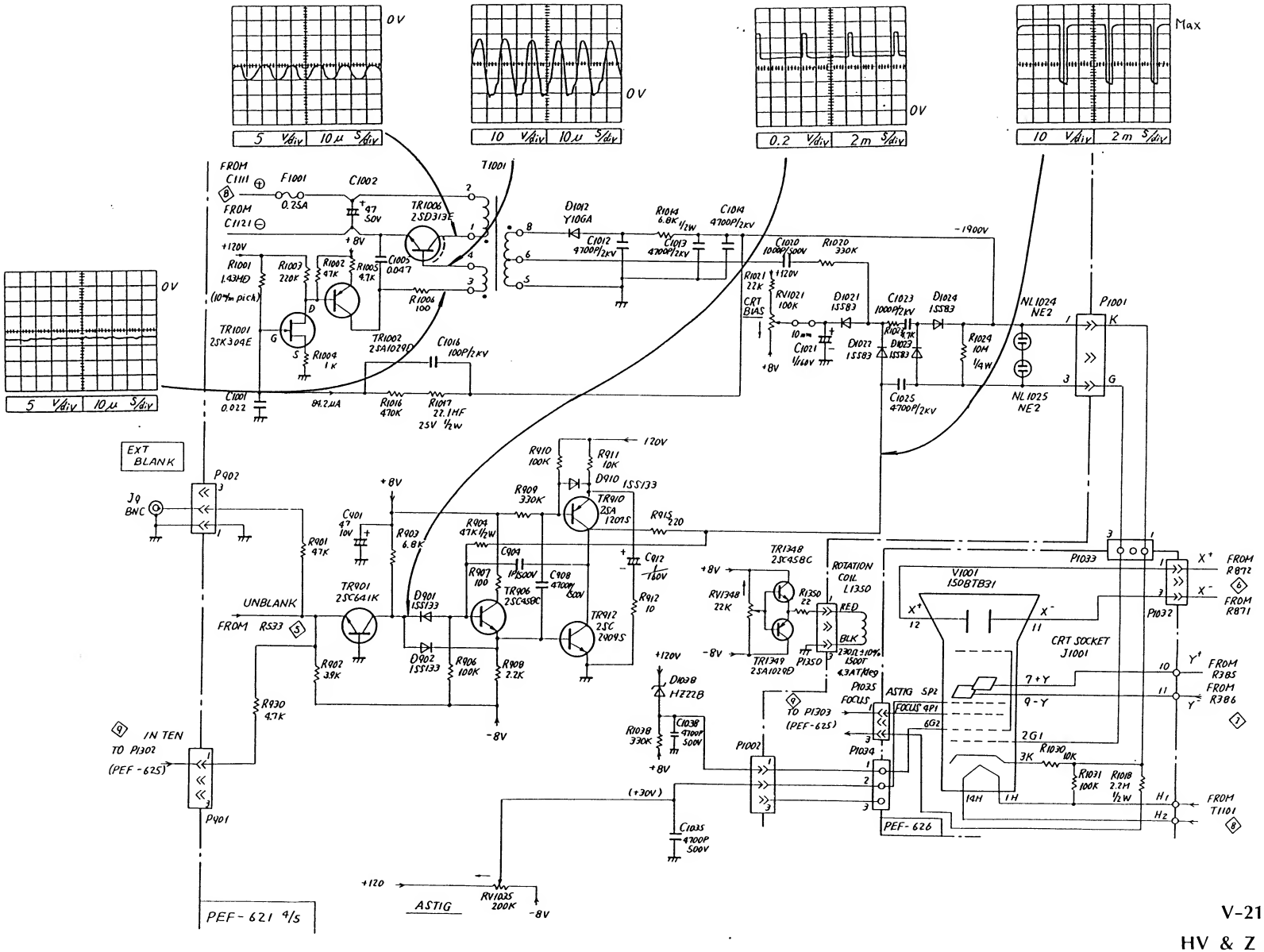

V-211

HV & Z AMP 7

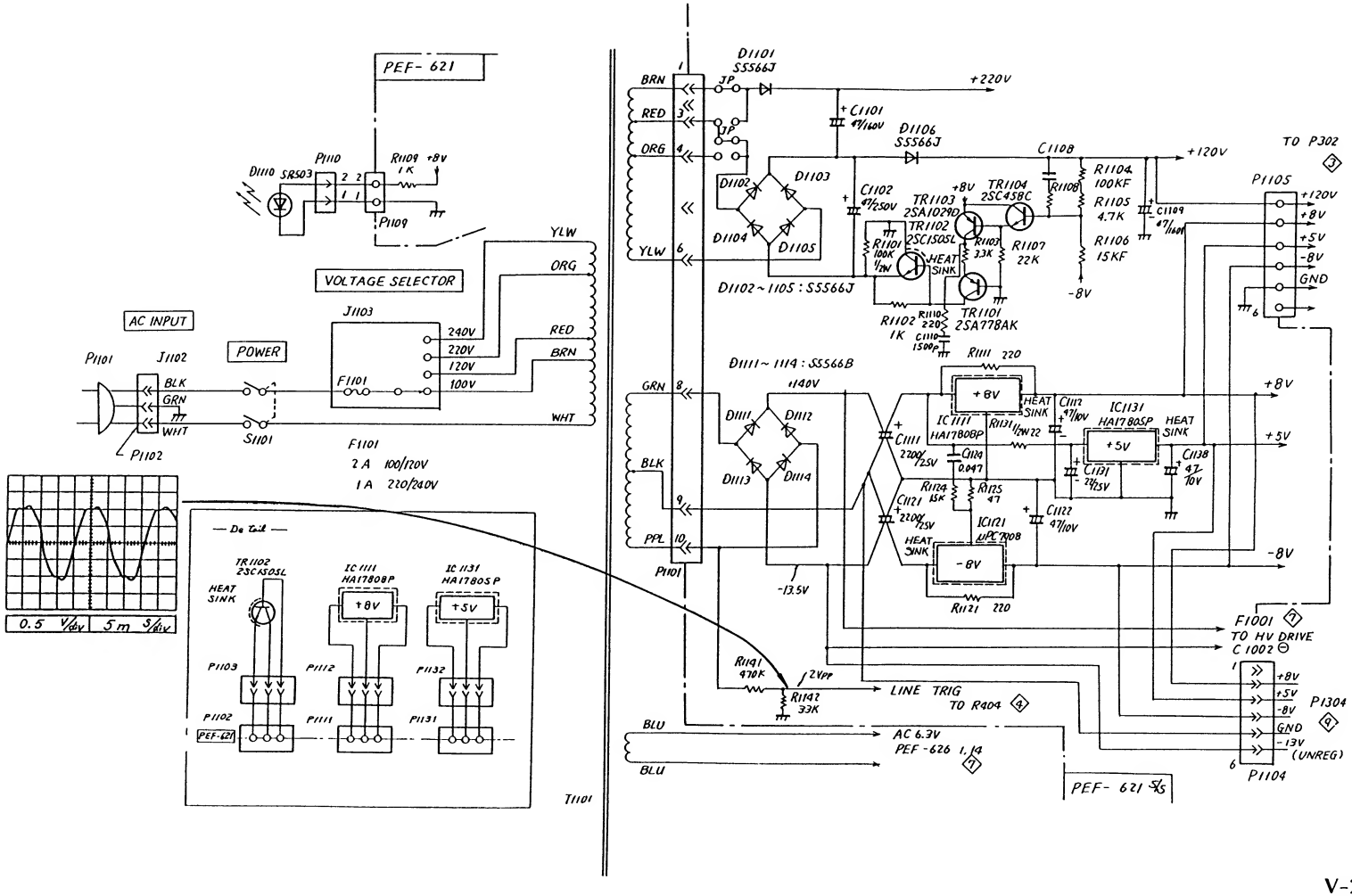

V-211

POWER SUPPLY

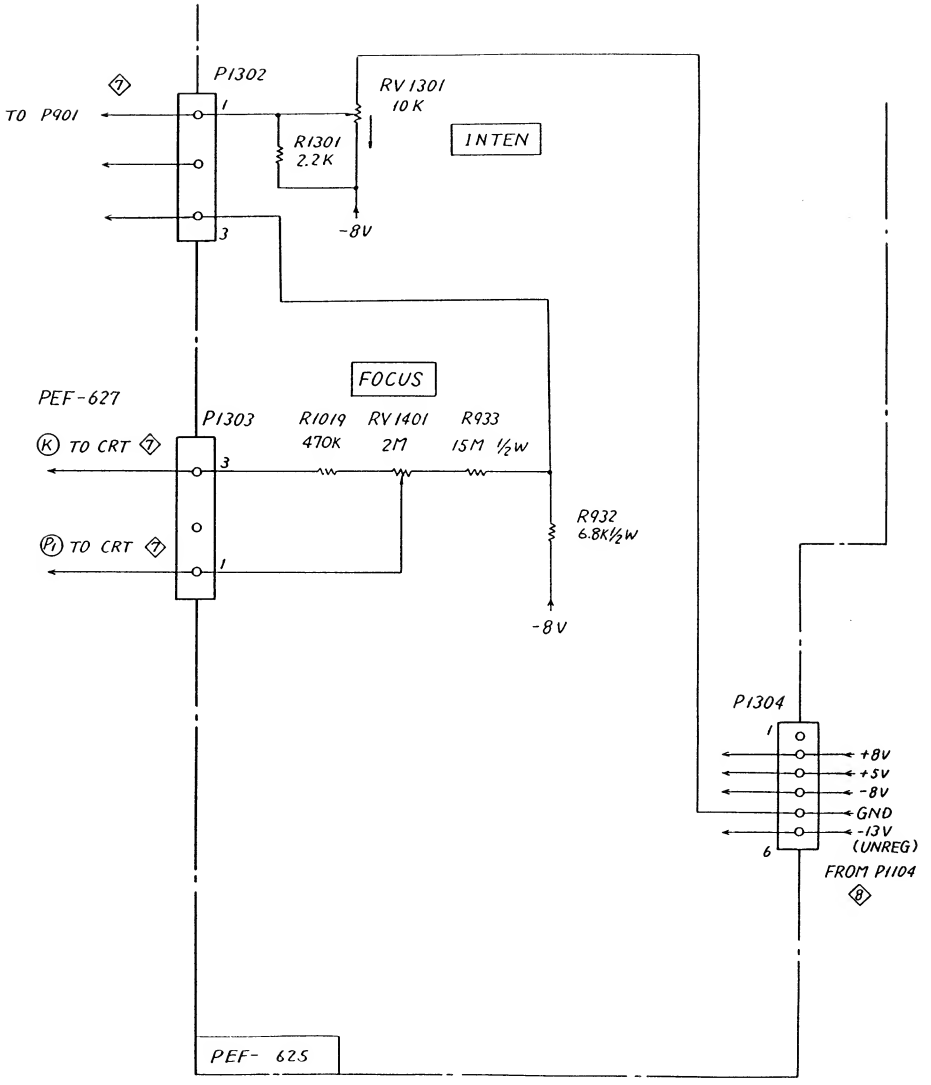
P1302
TO P901
RV 1301
10 K
INTEN
R1301
2.2K
-8V
FOCUS
PEF-627
P1303
R1019
470K
RV 1401
2M
R933
15M 1/2W
K TO CRT
P1 TO CRT
R932
6.8K 1/2W
-8V
P1304
+8V
+5V
-8V
GND
-13V
(UNREG)
FROM P1104
PEF- 625

V-211
RV/LAMP

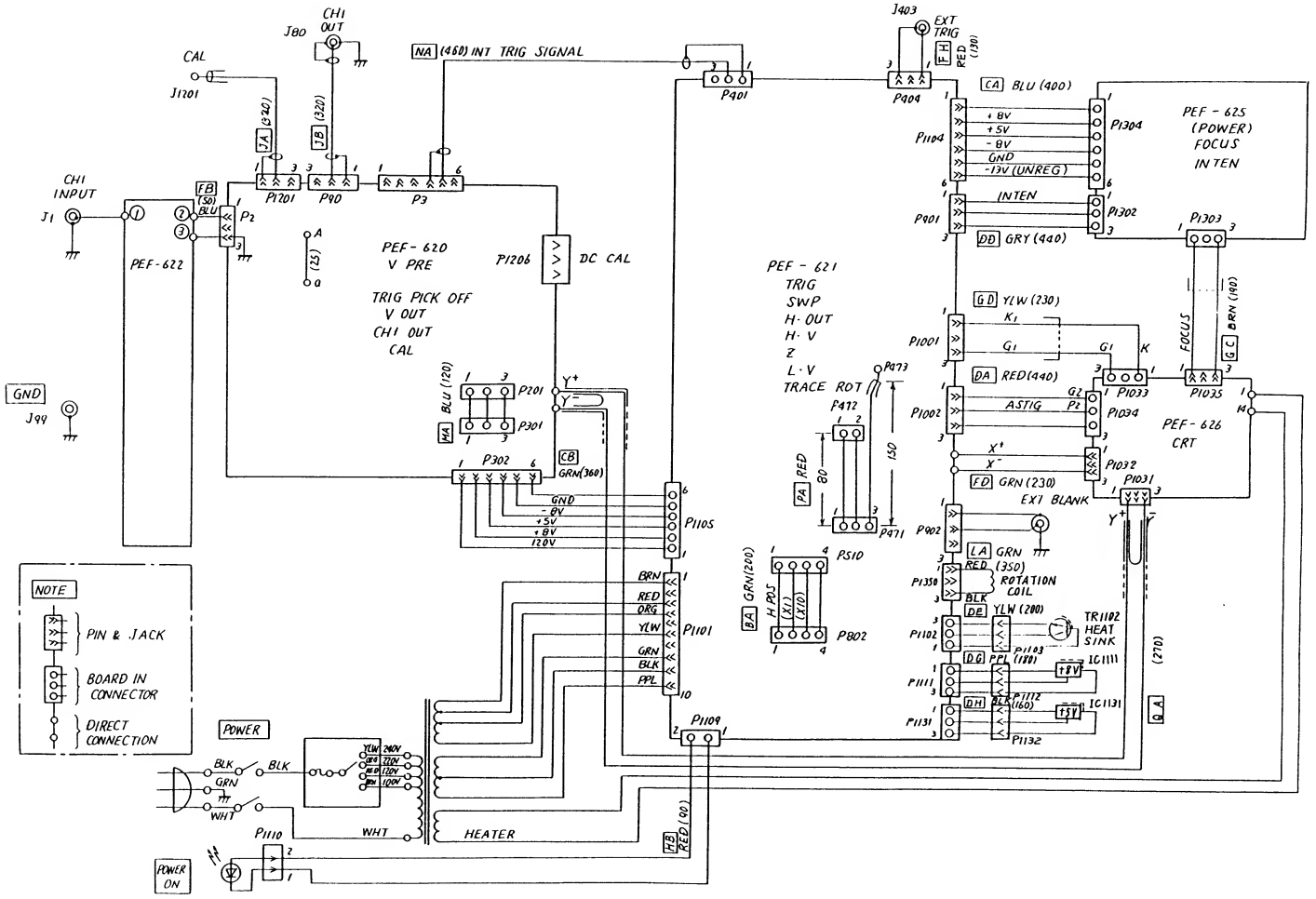

V-211
WIRING DIAGRAM

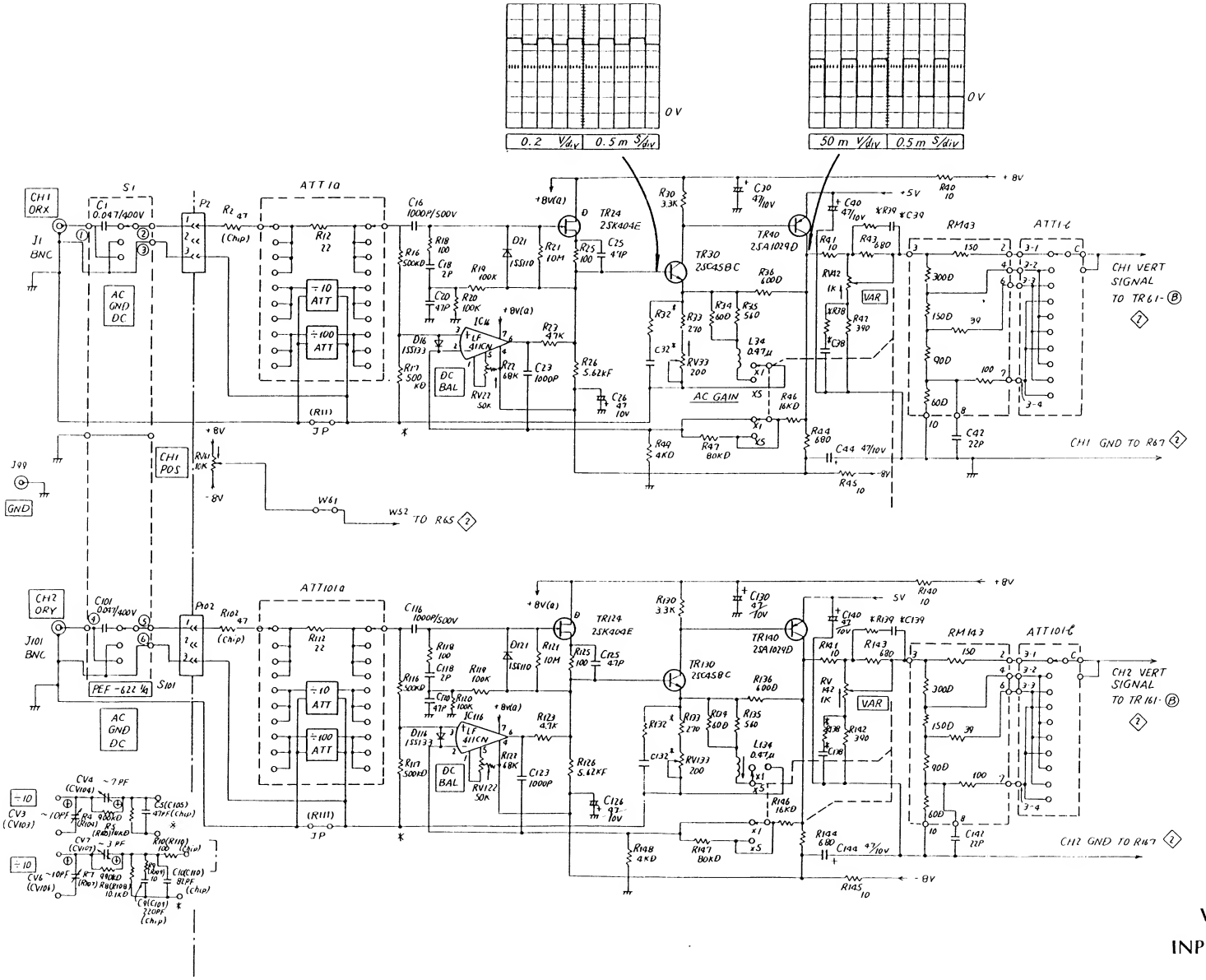

V-212

INPUT AMP ◇1

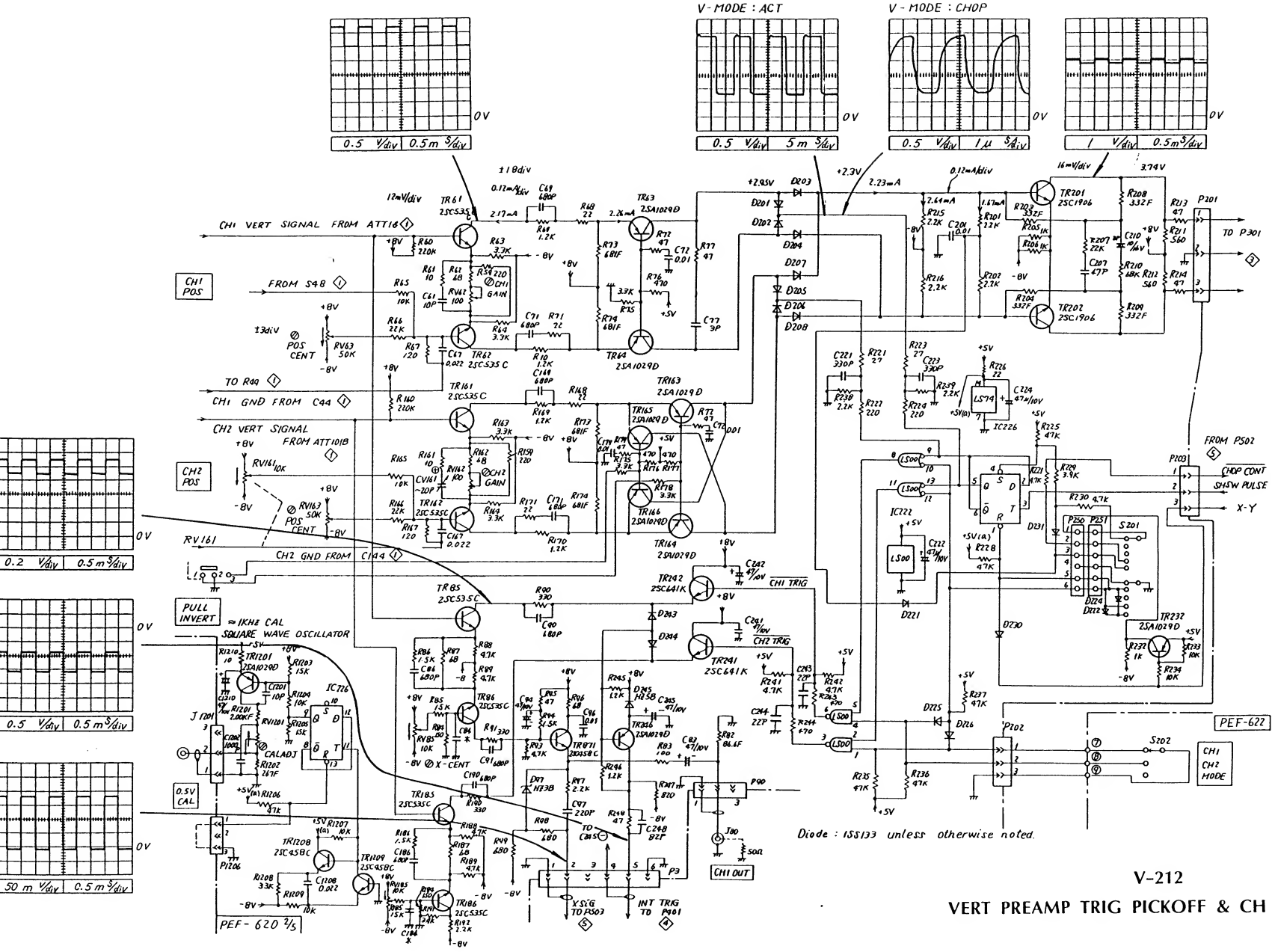

V-212

VERT PREAMP TRIG PICKOFF & CH SW MULTI ②

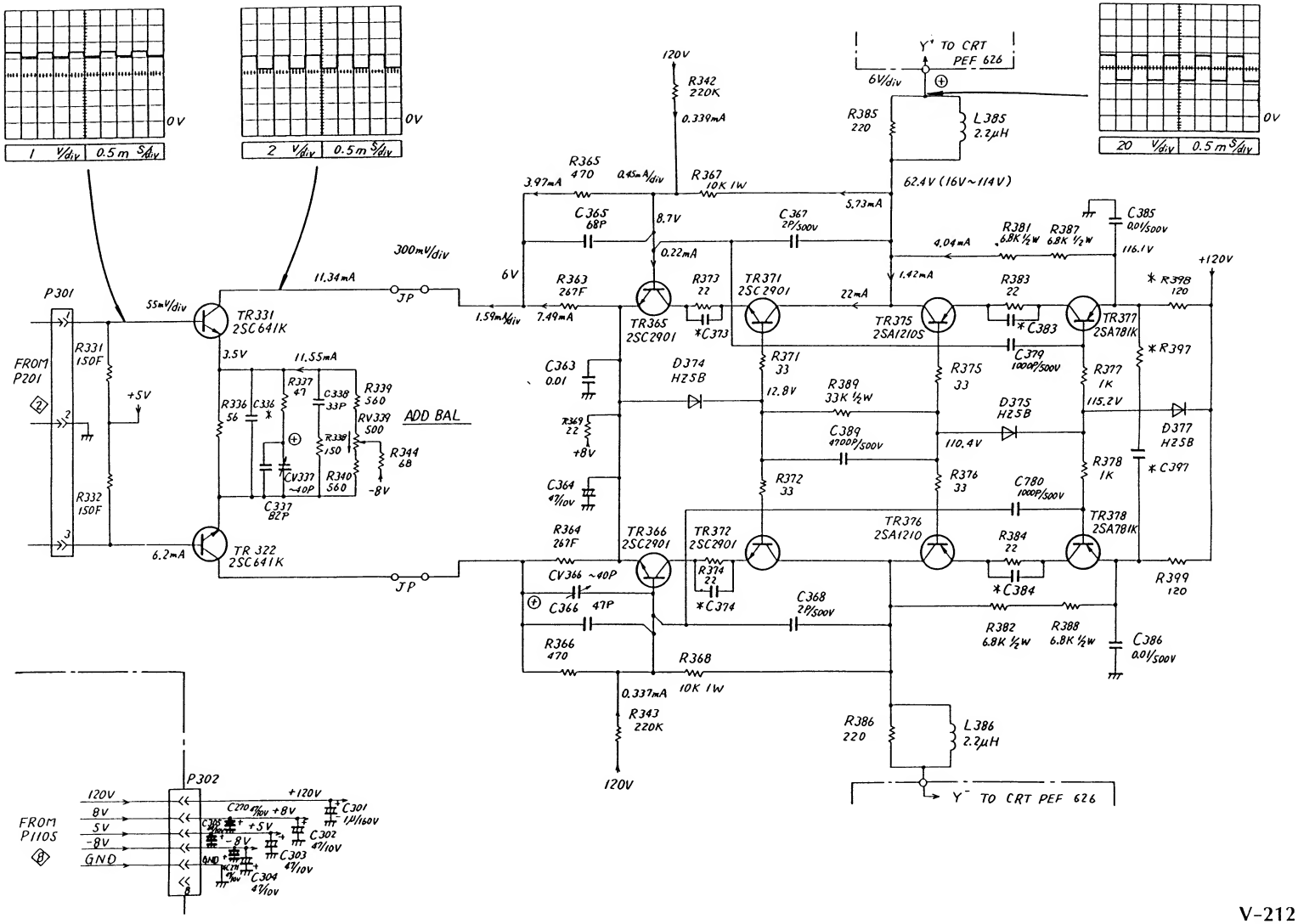
0V
1 V/div 0.5m S/div
0V
2 V/div 0.5m S/div
0V
20 V/div 0.5m S/div
Y' TO CRT PEF 626
6V/div
120V
R342 220K
0.339mA
R385 220
L385 2.2μH
62.4V (16V~114V)
R365 470
3.97mA
0.45mA/div
R367 10K 1W
5.73mA
C365 68P
8.7V
C367 2P/500V
C385 0.01/500V
R381 6.8K ½W
R387 6.8K ½W
4.04mA
116.1V
+120V
300mV/div
11.34mA
6V
R363 267F
R373 22
TR371 2SC2901
1.42mA
22mA
R383 22
* R398 120
P301
55mV/div
TR331 2SC641K
JP
1.59mA/div
7.49mA
TR365 2SC2901
*C373
TR375 2SA1210S
*C383
TR377 2SA781K
FROM P201
R331 150F
3.5V
11.55mA
R337 47
C338 33P
R339 560
R336 56
C336 *
RV339 500
ADD BAL
+5V
R338 150
R344 68
CV337 ~40P
R340 560
-8V
C337 8ZP
R332 150F
6.2mA
TR 322 2SC641K
C363 0.01
D374 HZ5B
R371 33
12.8V
R389 33K ½W
R375 33
C379 1000P/500V
R377 1K
115.2V
* R397
D375 HZ5B
D377 HZ5B
R369 22
+8V
C389 4700P/500V
110.4V
R378 1K
* C397
C364 4V/10V
R372 33
R376 33
C780 1000P/500V
R364 267F
TR366 2SC2901
TR372 2SC2901
TR376 2SA1210
R384 22
TR378 2SA781K
JP
CV366 ~40P
R374 22
*C374
C368 2P/500V
*C384
R399 120
C366 47P
R382 6.8K ½W
R388 6.8K ½W
C386 0.01/500V
R366 470
R368 10K 1W
0.337mA
R343 220K
R386 220
L386 2.2μH
120V
Y' TO CRT PEF 626
P302
FROM P1105
120V
8V
5V
-8V
GND
+120V
C270 4V/10V
+8V
C301 1μ/160V
+5V
C302 4V/10V
-8V
C303 4V/10V
C304 4V/10V

V-212

V OUT ③

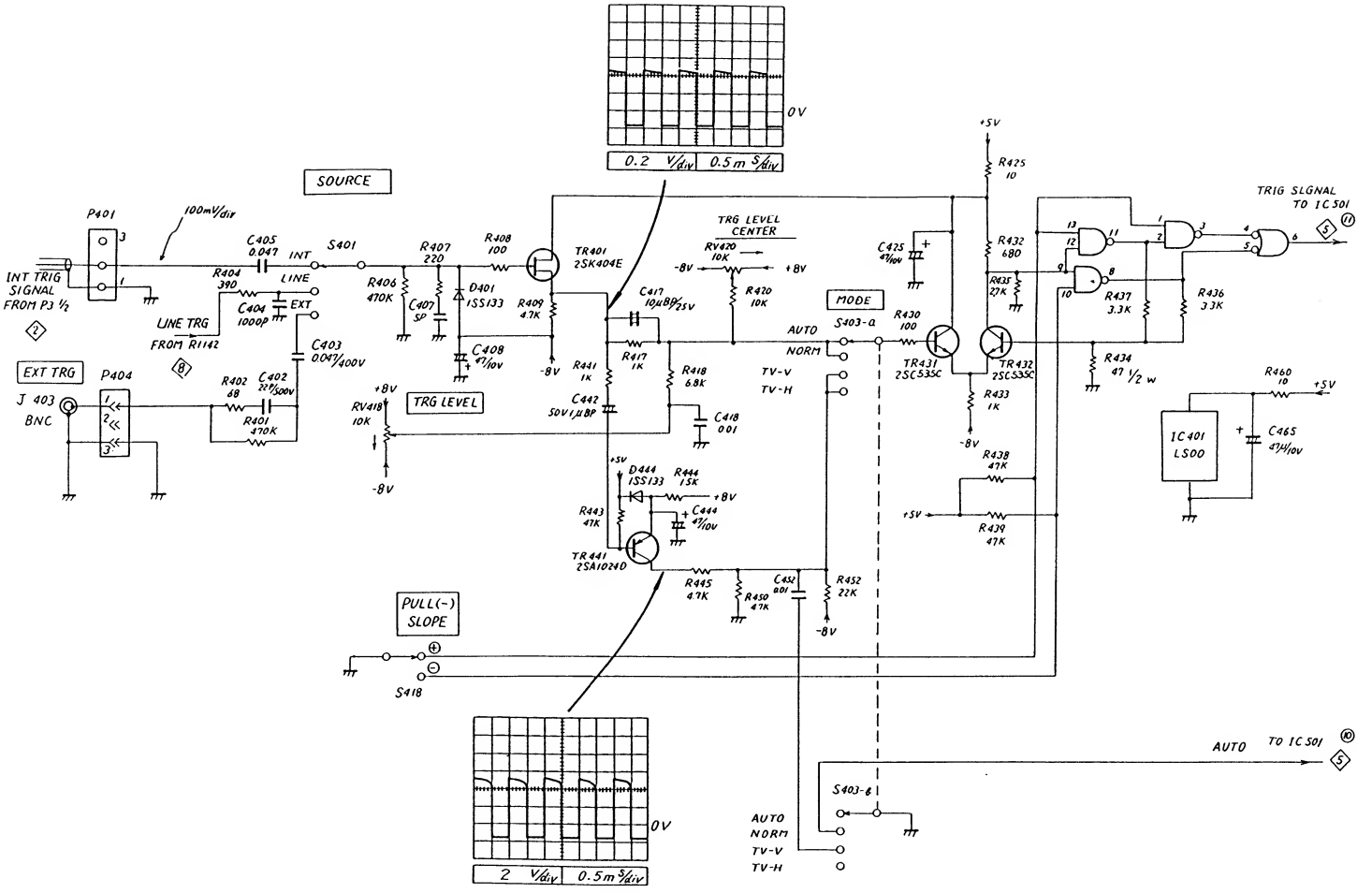

V-212

TRIG GEN ④

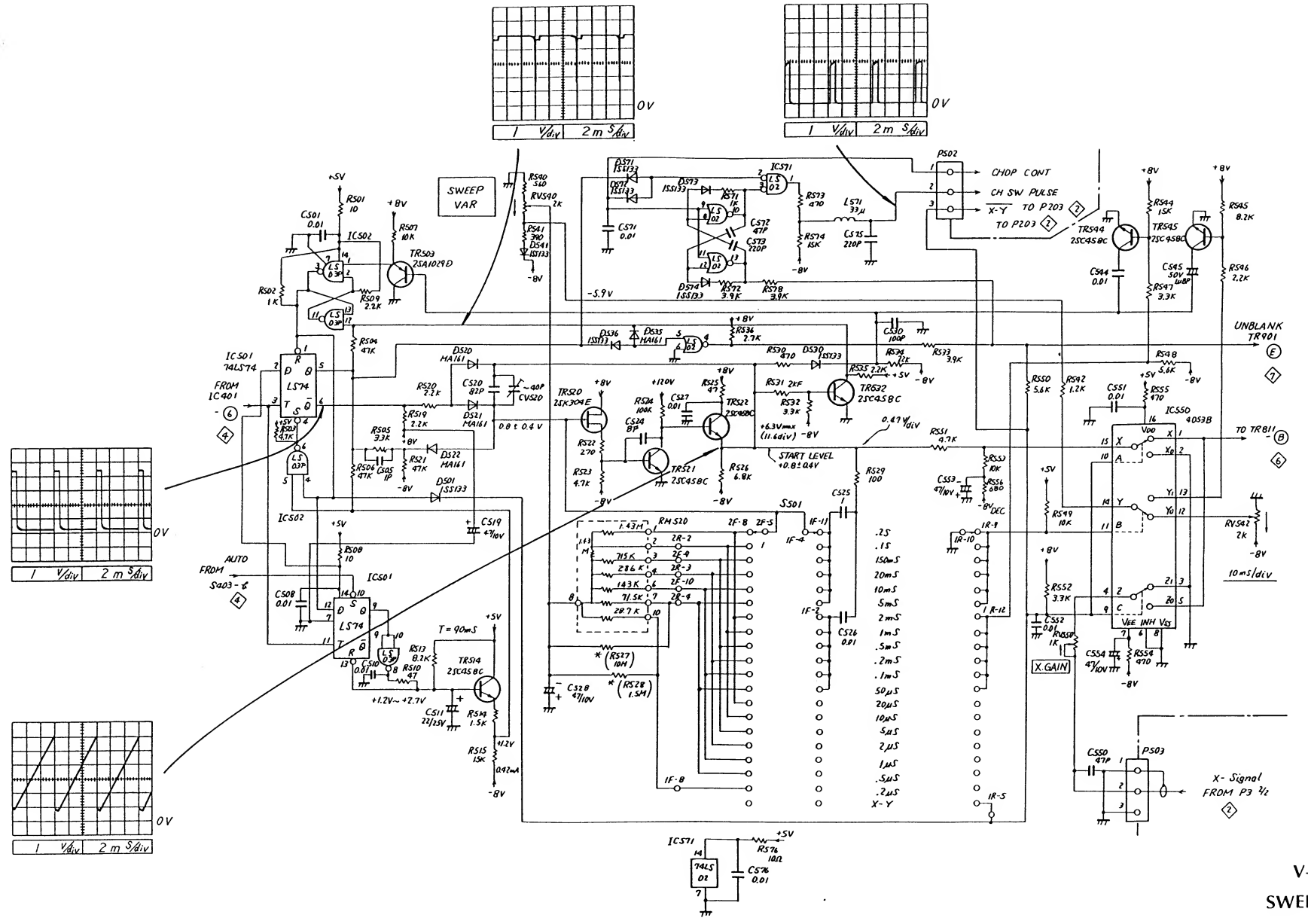

V-212
SWEEP GEN 5

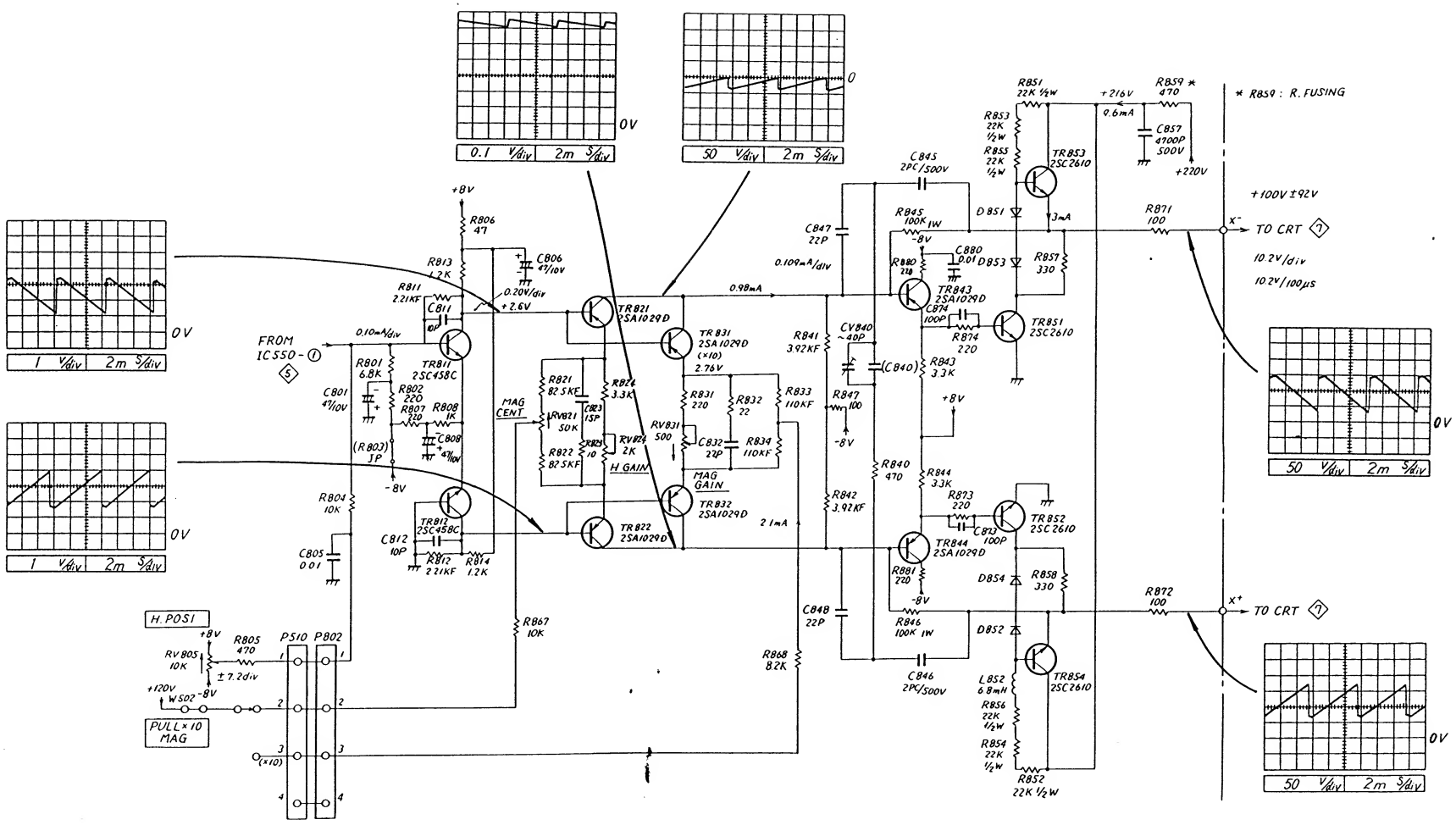
* R859 : R. FUSING
FROM IC550-①
TO CRT ⑦
TO CRT ⑦
H. POSI
PULL×10 MAG
MAG CENT
H GAIN
MAG GAIN
+100V ±92V
10.2V/div
10.2V/100μs
0.1 V/div 2m S/div
50 V/div 2m S/div
1 V/div 2m S/div
0.20V/div
0.10mA/div
0.109mA/div
0.98mA
2.1mA
+216V
0.6mA
+220V
+2.6V
2.76V
+8V
-8V
TR821 2SA1029D
TR831 2SA1029D (×10)
TR832 2SA1029D
TR822 2SA1029D
TR811 2SC458C
TR812 2SC458C
TR843 2SA1029D
TR844 2SA1029D
TR853 2SC2610
TR851 2SC2610
TR852 2SC2610
TR854 2SC2610
R806 47
R813 1.2K
R811 2.21KF
C811 10P
C806 47/10V
R801 6.8K
R802 220
R807 220
R808 1K
C801 47/10V
C808 47/10V
(R803) JP
R804 10K
C805 0.01
C812 10P
R812 2.21KF
R814 1.2K
R821 82.5KF
RV821 50K
R822 82.5KF
C823 15P
R829 10
R824 3.3K
RV824 2K
RV831 500
R831 220
R832 22
C832 22P
R834 110KF
R833 110KF
R841 3.92KF
CV840 ~40P
(C840)
R843 3.3K
R847 100
R842 3.92KF
R840 470
R844 3.3K
R873 220
C873 100P
R881 220
R846 100K 1W
C846 2PC/500V
C848 22P
R868 8.2K
R867 10K
C845 2PC/500V
R845 100K 1W
C880 0.01
R880 220
R874 220
C874 100P
R851 22K 1/2W
R853 22K 1/2W
R855 22K 1/2W
R857 330
R858 330
R856 22K 1/2W
R854 22K 1/2W
R852 22K 1/2W
L852 6.8mH
R859 * 470
C857 4700P 500V
R871 100
R872 100
D851
D853
D854
D852
RV805 10K
R805 470
±7.2div
WS02
P510
P802
(×10)

V-212

H AMP ⑥

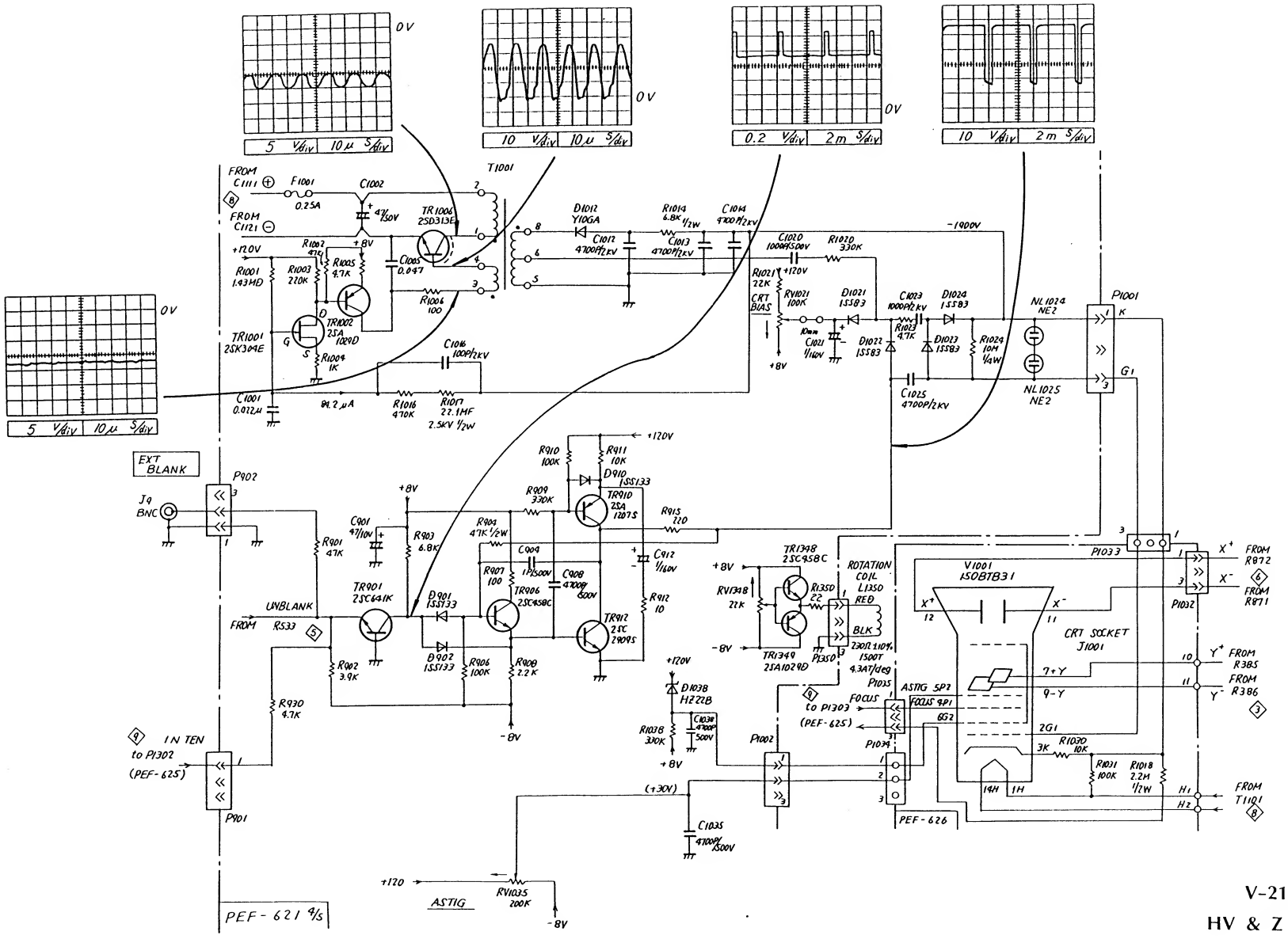

V-212

HV & Z AMP ⑦

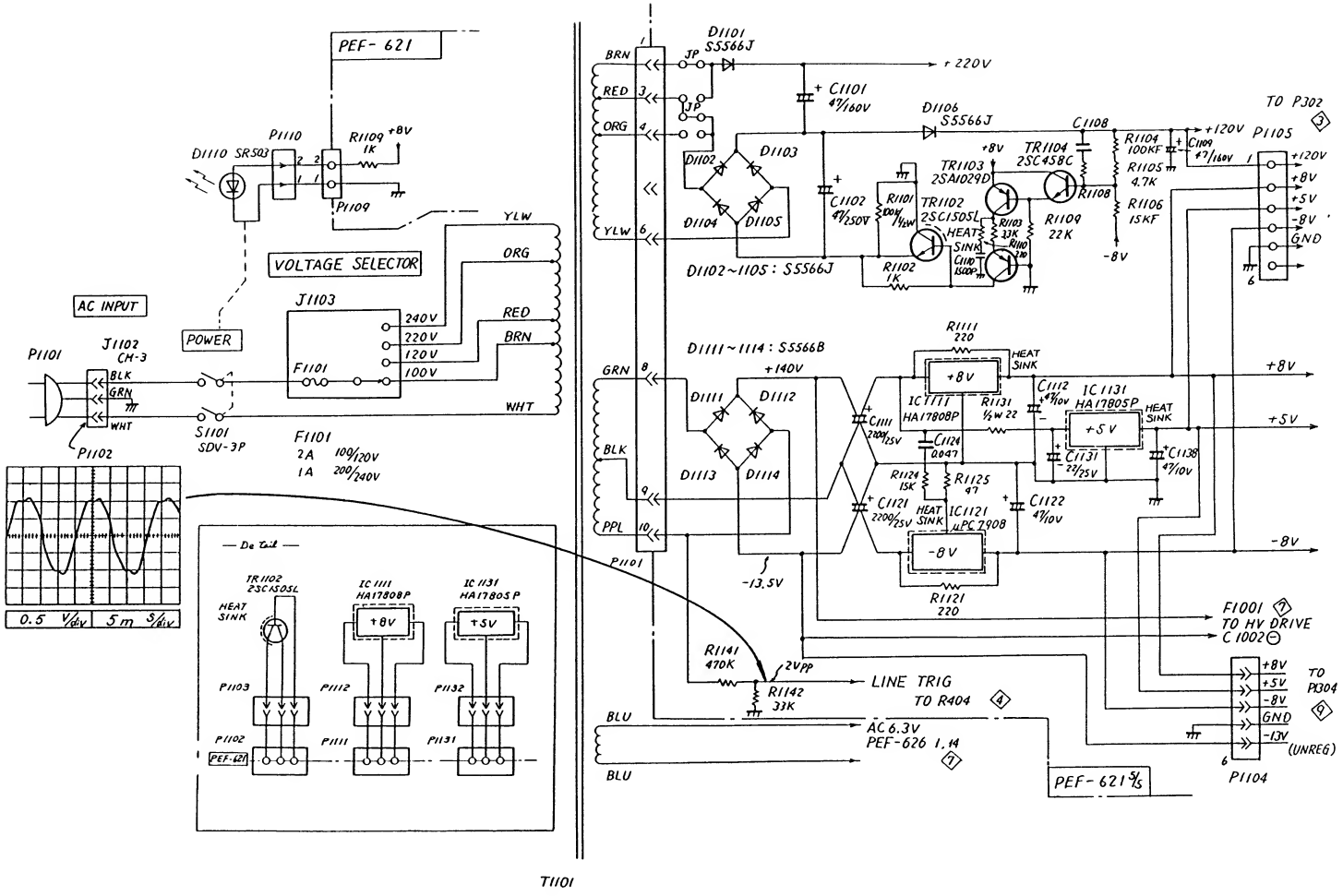

V-212

POWER SUPPLY

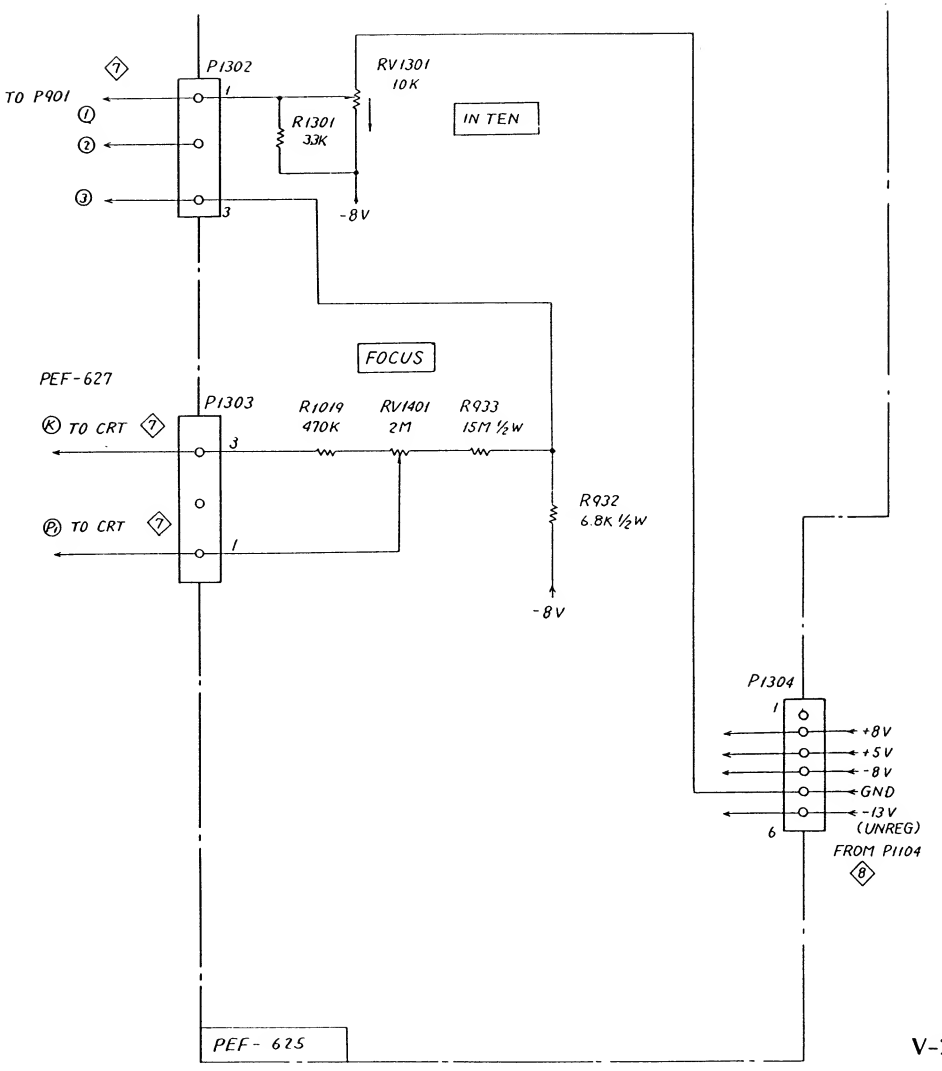

V-212

RV/LAMP 9

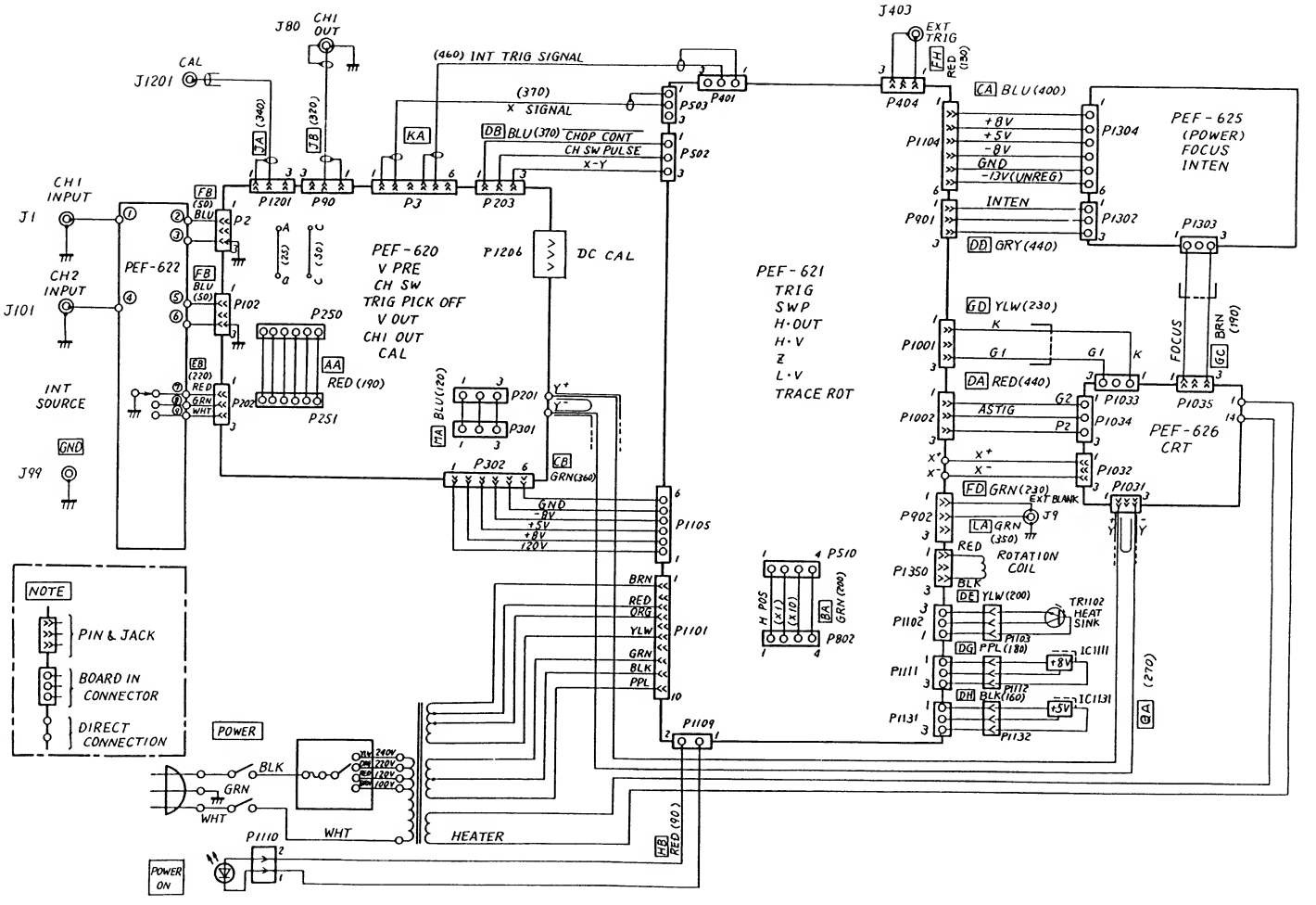

V-212
WIRING DIAGRAM

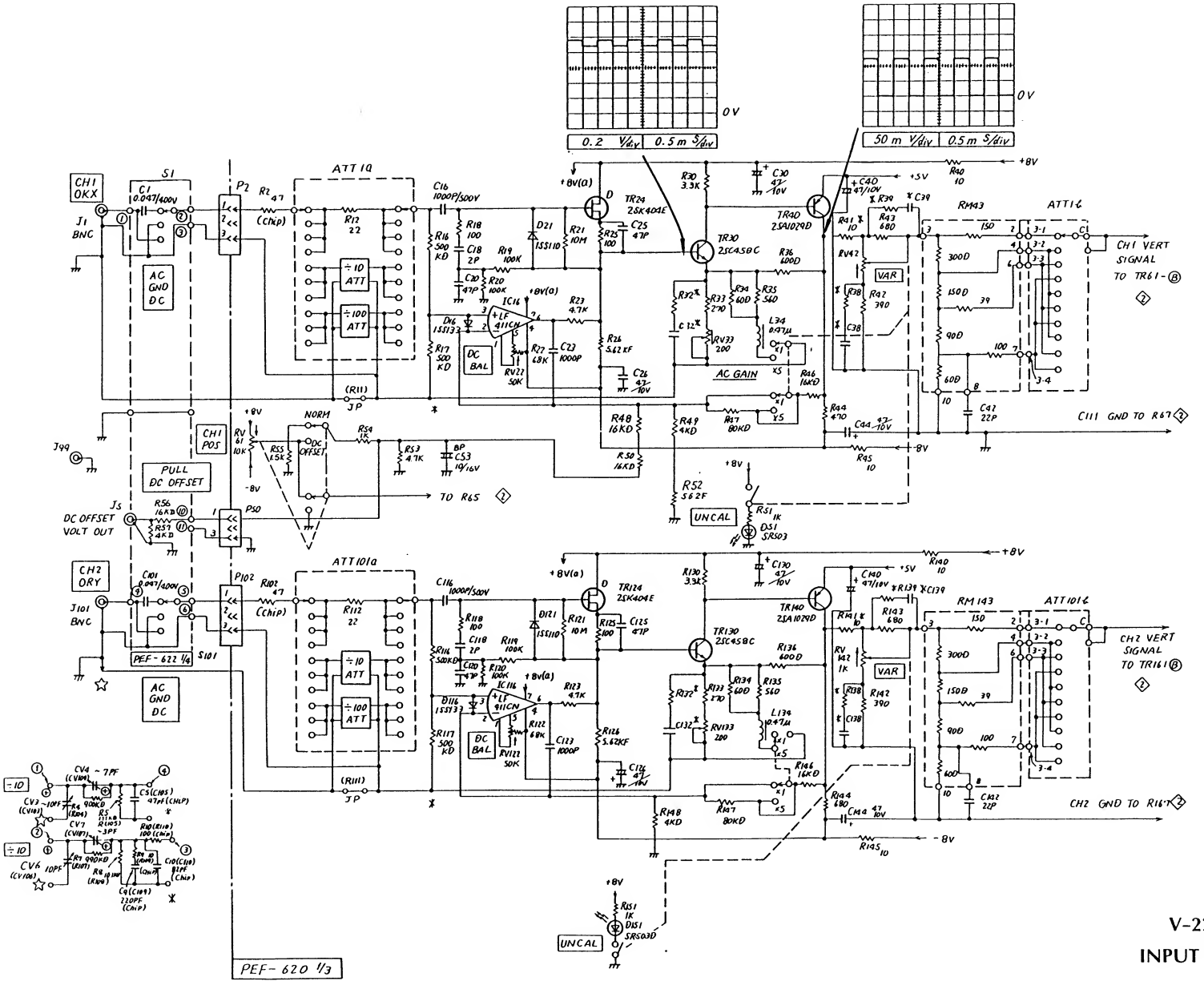

V-222

INPUT AMP ①

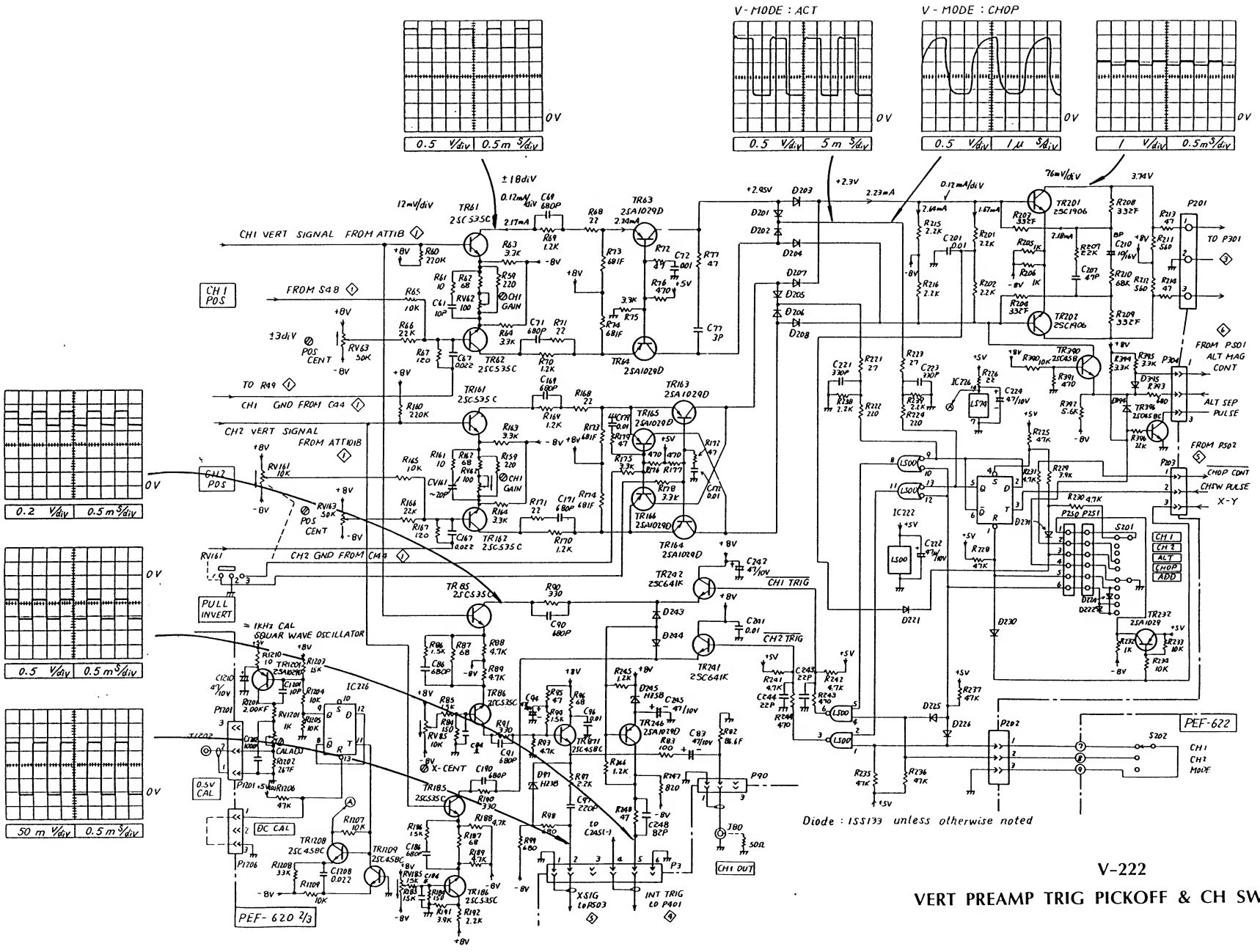

V-222

VERT PREAMP TRIG PICKOFF & CH SW MULTI ②

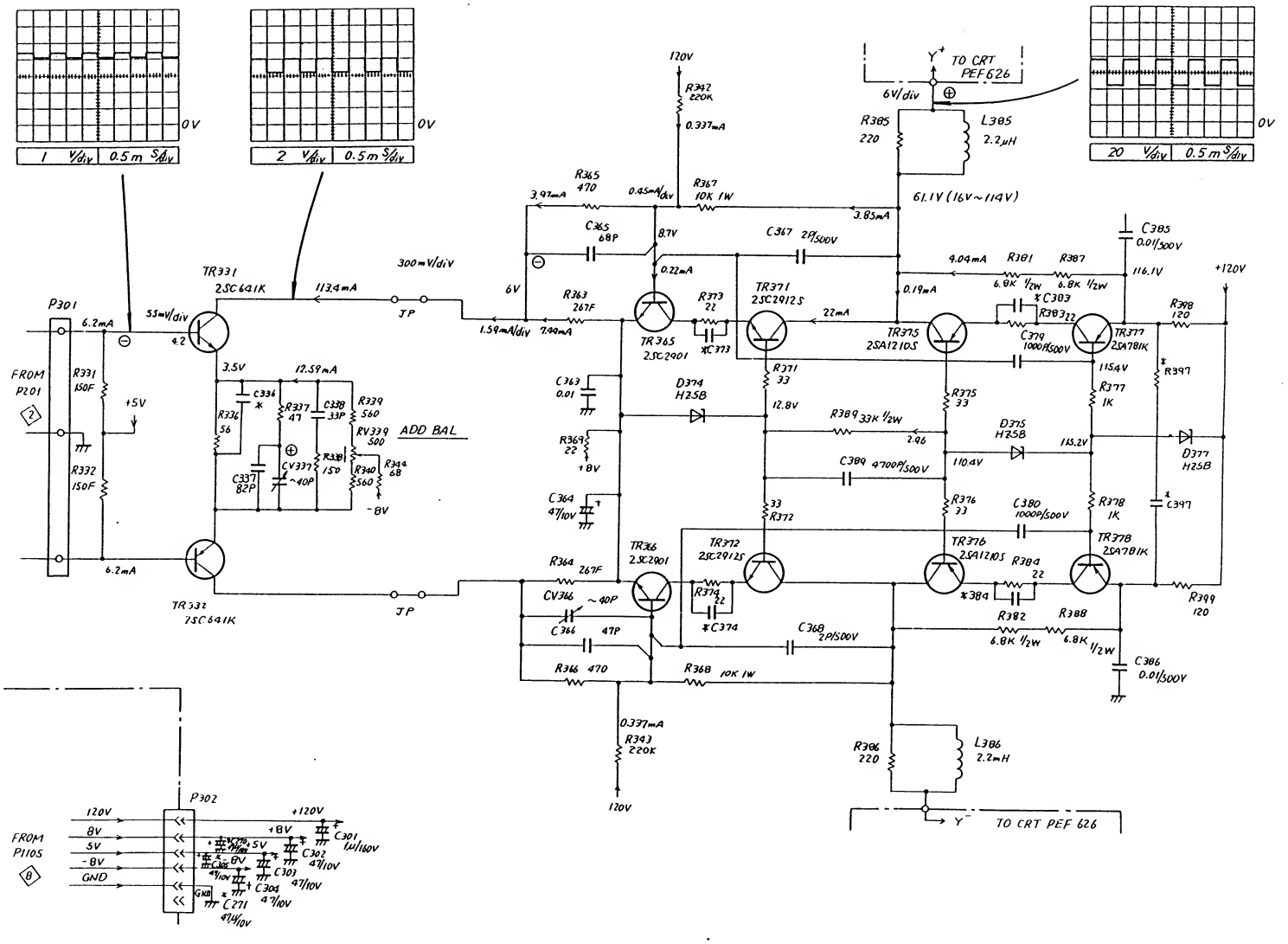
0V
1 V/div 0.5m S/div
2 V/div 0.5m S/div
20 V/div 0.5m S/div
TO CRT PEF626
6V/div
61.1V (16V~114V)
P301
FROM P201
TR331 2SC641K
TR332 2SC641K
TR365 2SC2901
TR366 2SC2901
TR371 2SC2912S
TR372 2SC2912S
TR375 2SA1210S
TR376 2SA1210S
TR377 2SA781K
TR378 2SA781K
ADD BAL
JP
+120V
120V
P302
FROM P110S
GND
TO CRT PEF626

V-222

V OUT ③

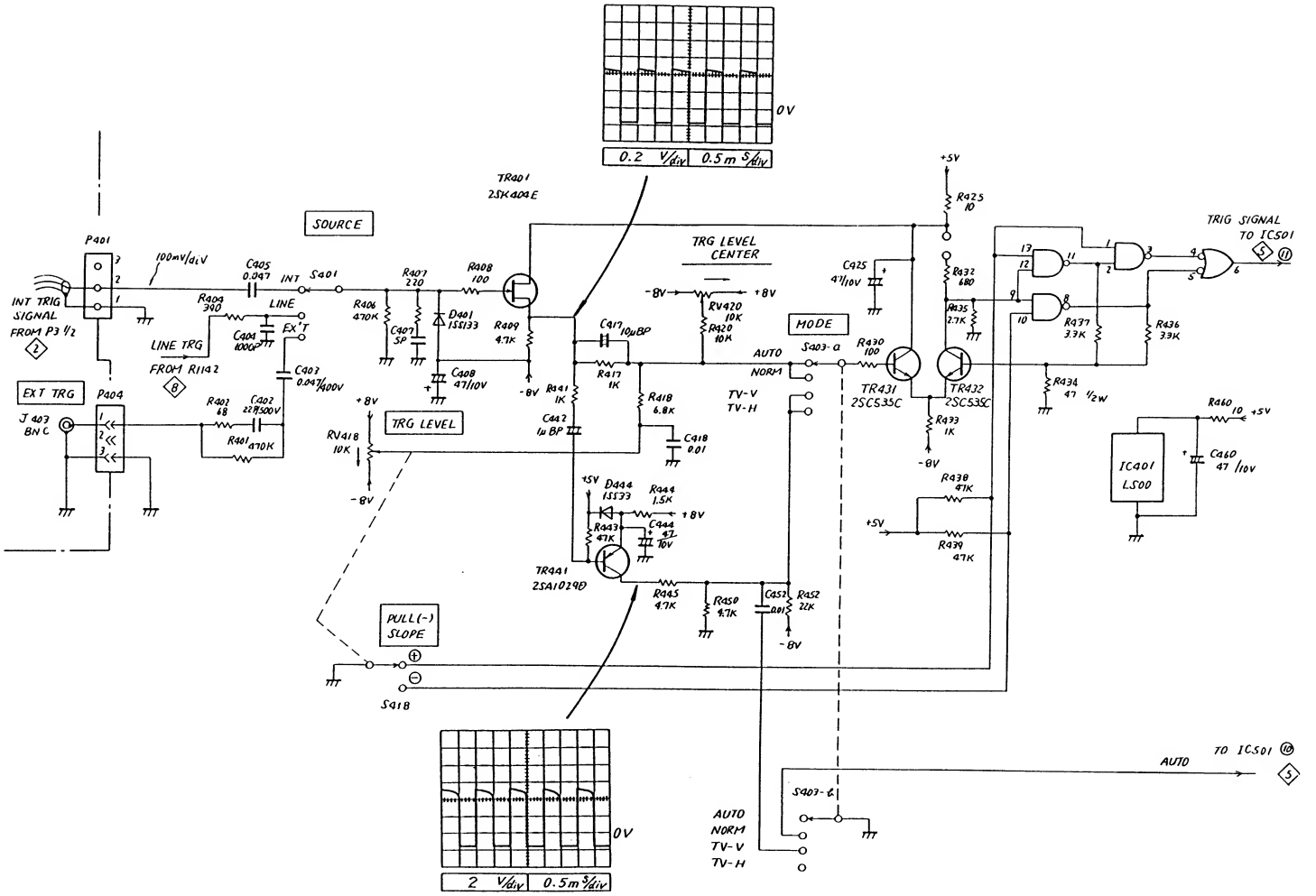

V-222

TRIG GEN ④

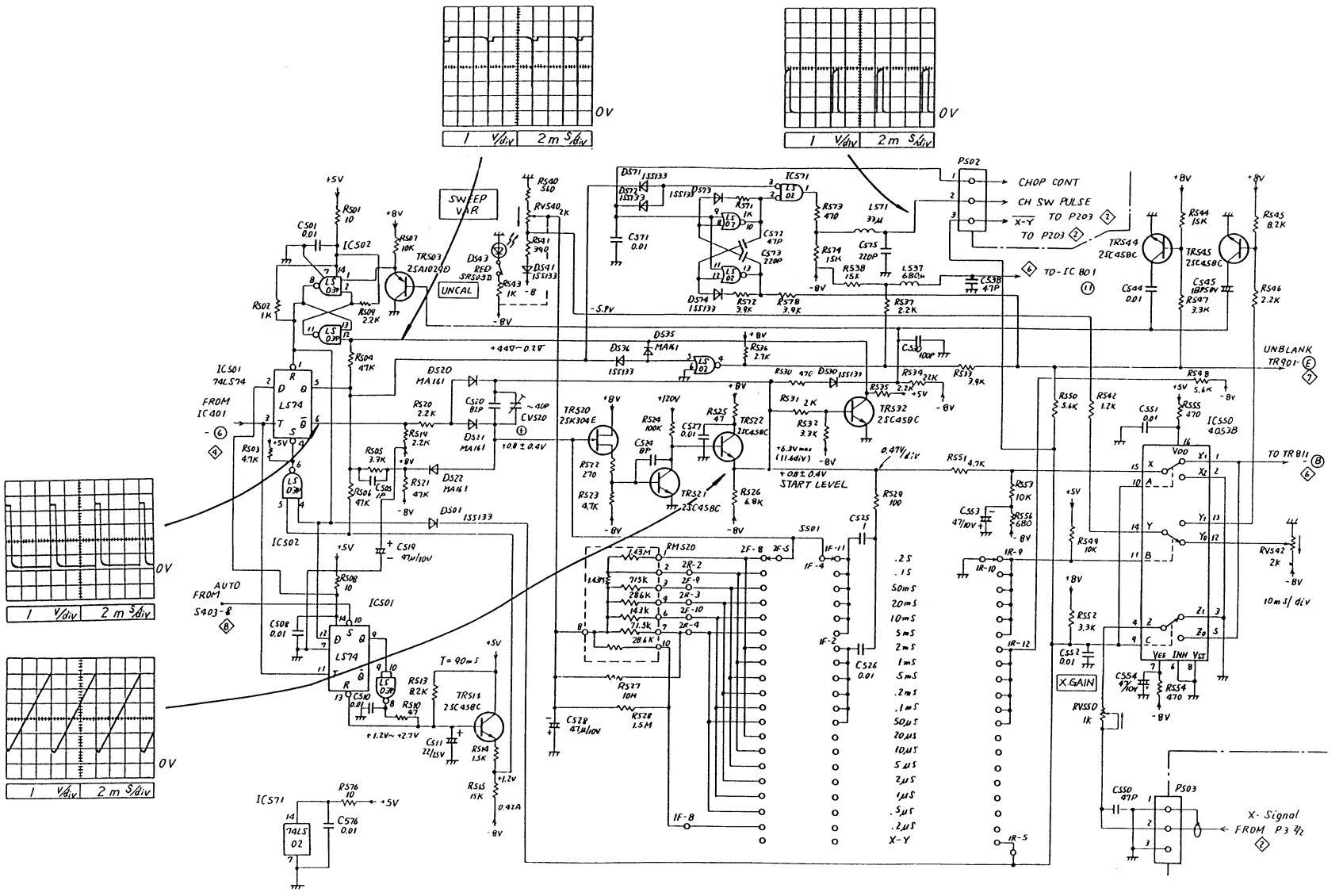

V-222

SWEEP GEN 5

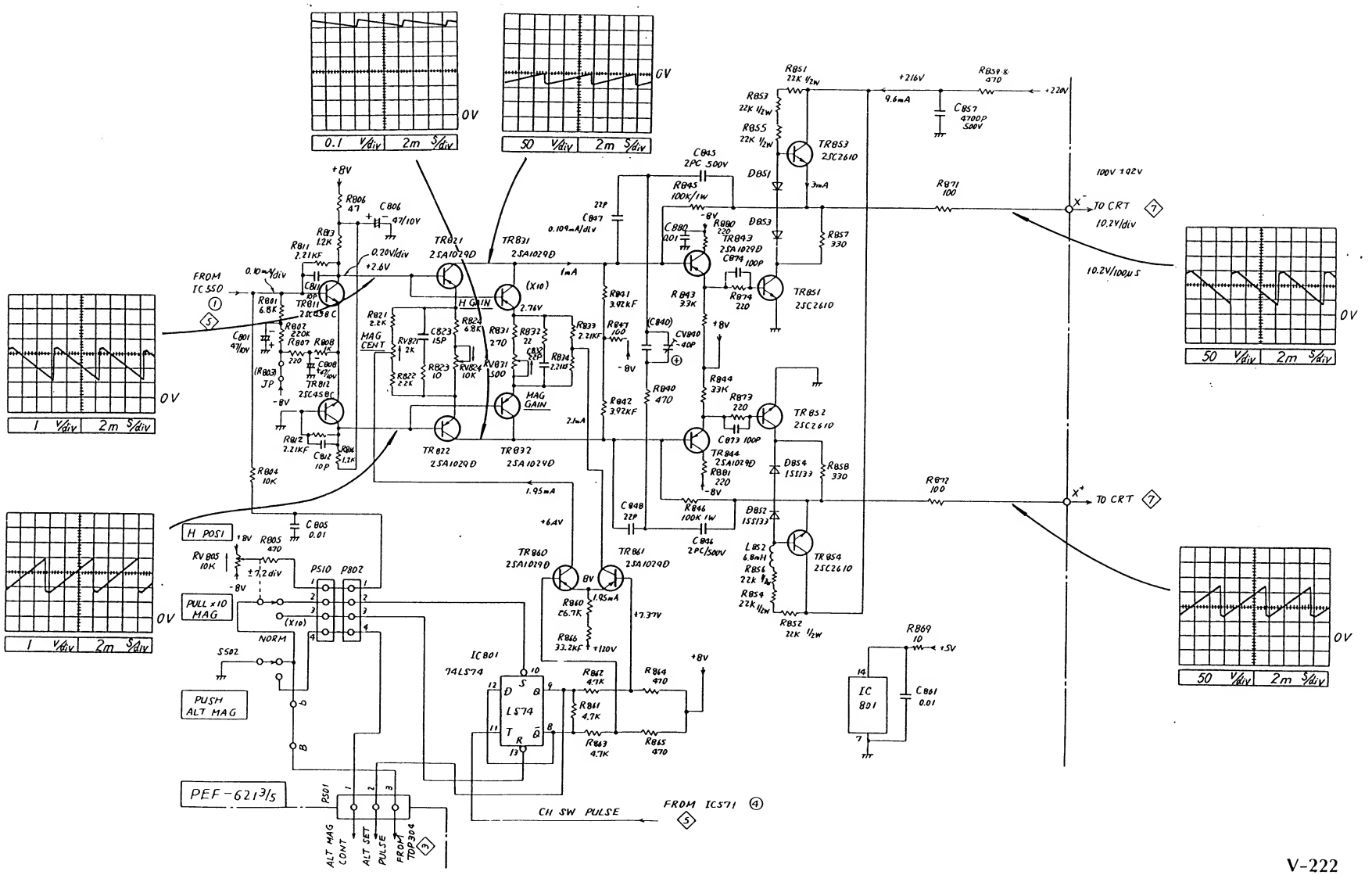
0.1 V/div 2m S/div
50 V/div 2m S/div
1 V/div 2m S/div
50 V/div 2m S/div
1 V/div 2m S/div
50 V/div 2m S/div
FROM IC550
TO CRT
TO CRT
H POSI
PULL x10 MAG
NORM
PUSH ALT MAG
PEF-6213/5
ALT MAG CONT
ALT SET PULSE
FROM TOP304
CH SW PULSE
FROM IC571
H GAIN
MAG CENT
MAG GAIN
IC801
74LS74
LS74
IC 801
TR821 2SA1029D
TR831 2SA1029D
TR822 2SA1029D
TR832 2SA1029D
TR841 2SA1029D
TR843 2SA1029D
TR844 2SA1029D
TR851 2SC2610
TR852 2SC2610
TR853 2SC2610
TR854 2SC2610
TR860 2SA1019D
TR861 2SA1029D
TR811 2SC458C
TR812 2SC458C
100V ±0.2V
10.2V/div
10.2V/100μS

V-222

H AMP ⑥

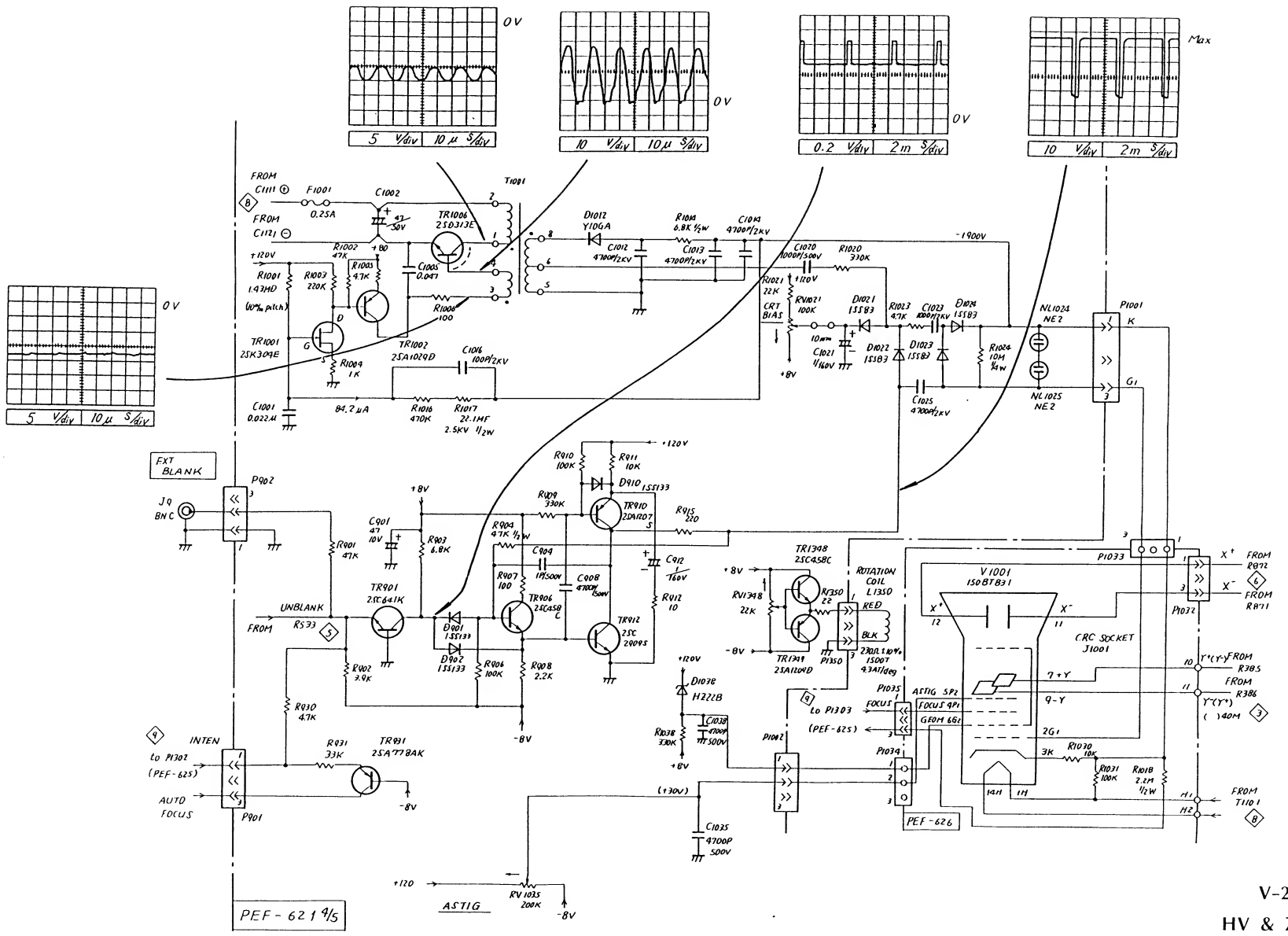

V-222

HV & Z AMP ⑦